All and more about Sharp PC-1500 at http://www.PC-1500.info

7. KEY P.C.B.

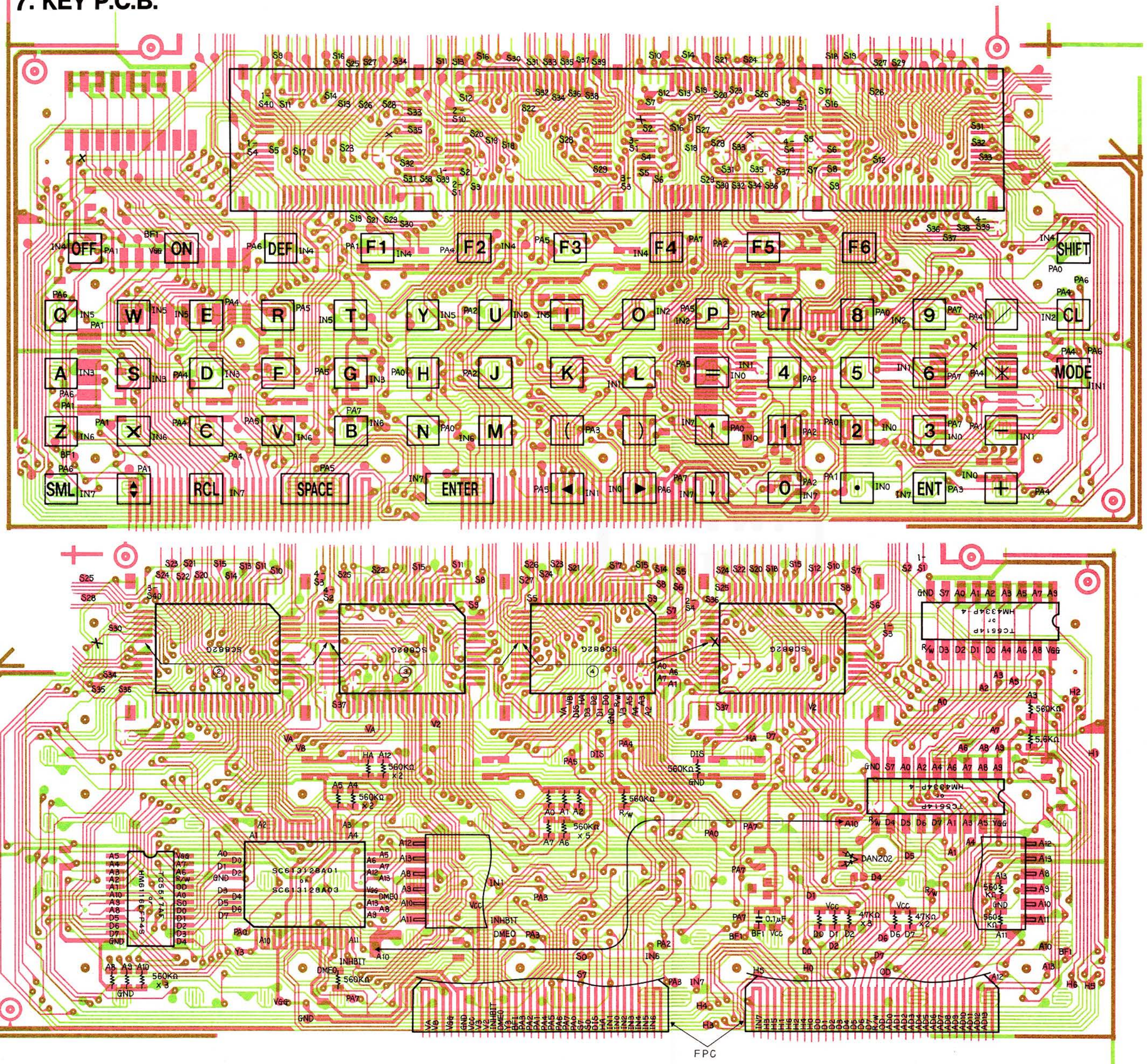

Do not sale this PDF !!!

8. MAIN PCB

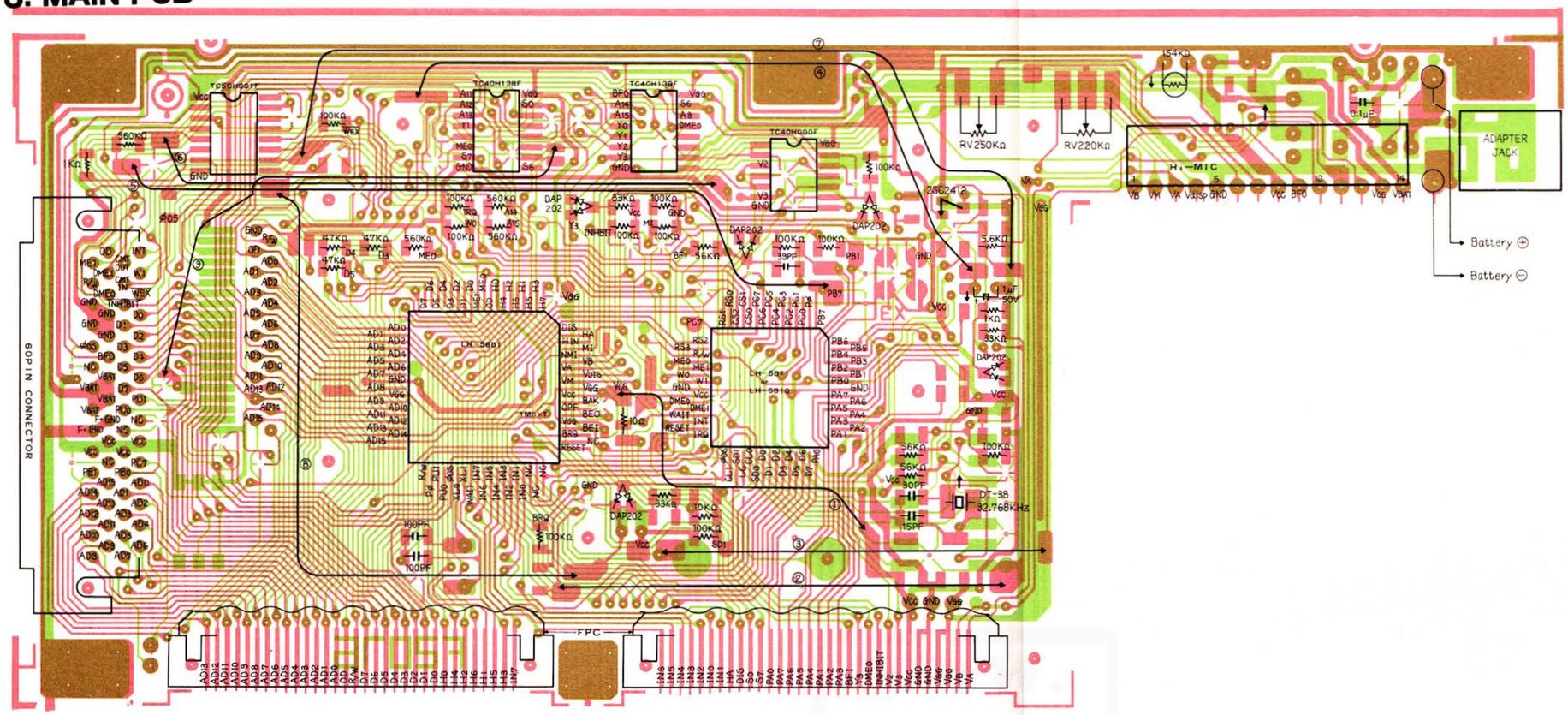
60P.I.N CONNECTOR
FPC
ADAPTER JACK
Battery ⊕
Battery ⊖
H.-MIC
RV250KΩ
RV220KΩ
154KΩ
DT-38 32.768KHz
DAP202
2SD2412
TC40H138F
TC40H600F
TC50H001F
LH-5801
LH-5810

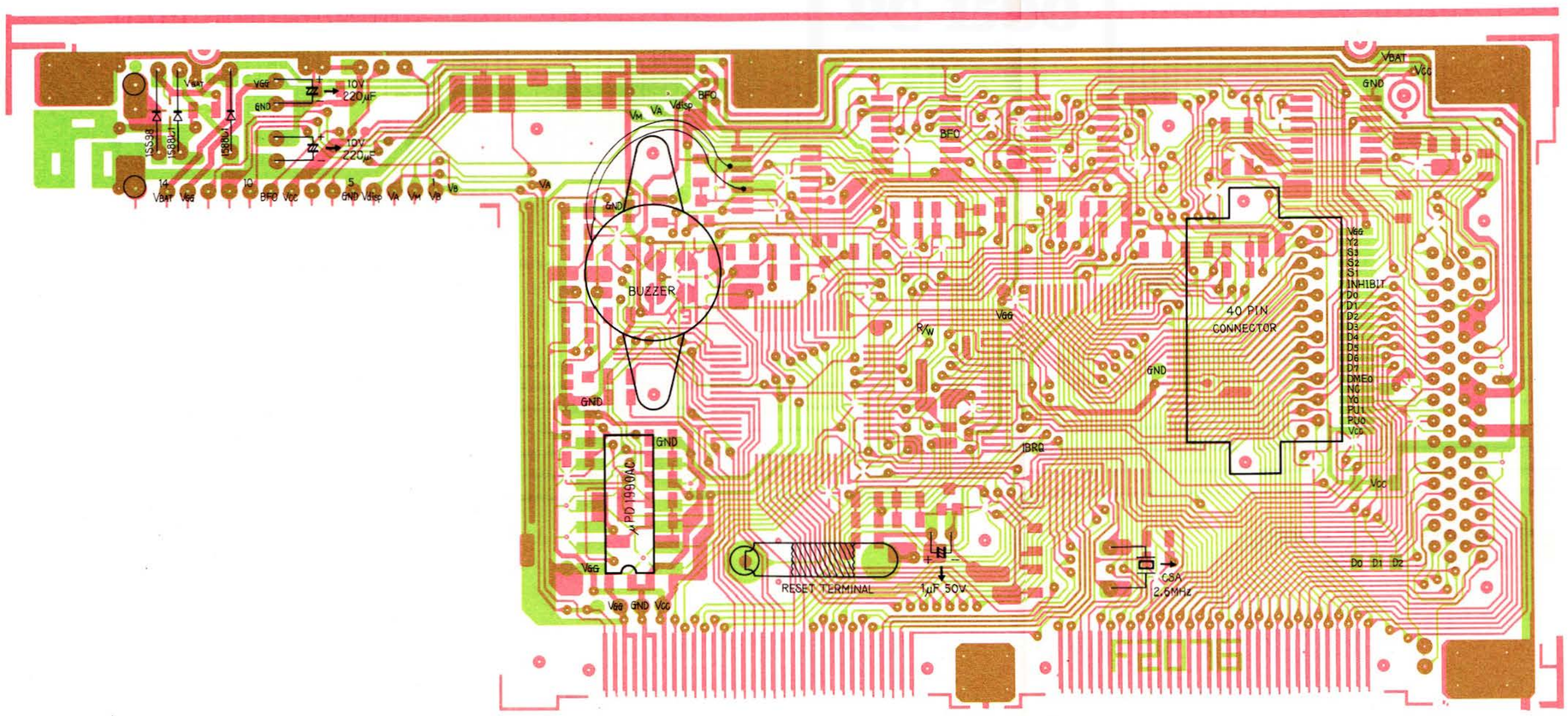
BUZZER
40 PIN CONNECTOR
RESET TERMINAL
1μF 50V
CSA 2.5MHz
μPD1990AC
1SS98
1S88μT
1S80μT
10V 220μF

All and more about Sharp PC-1500 at http://www.PC-1500.info

9. LCD SEGMENT & BACK PLATE SIGNAL

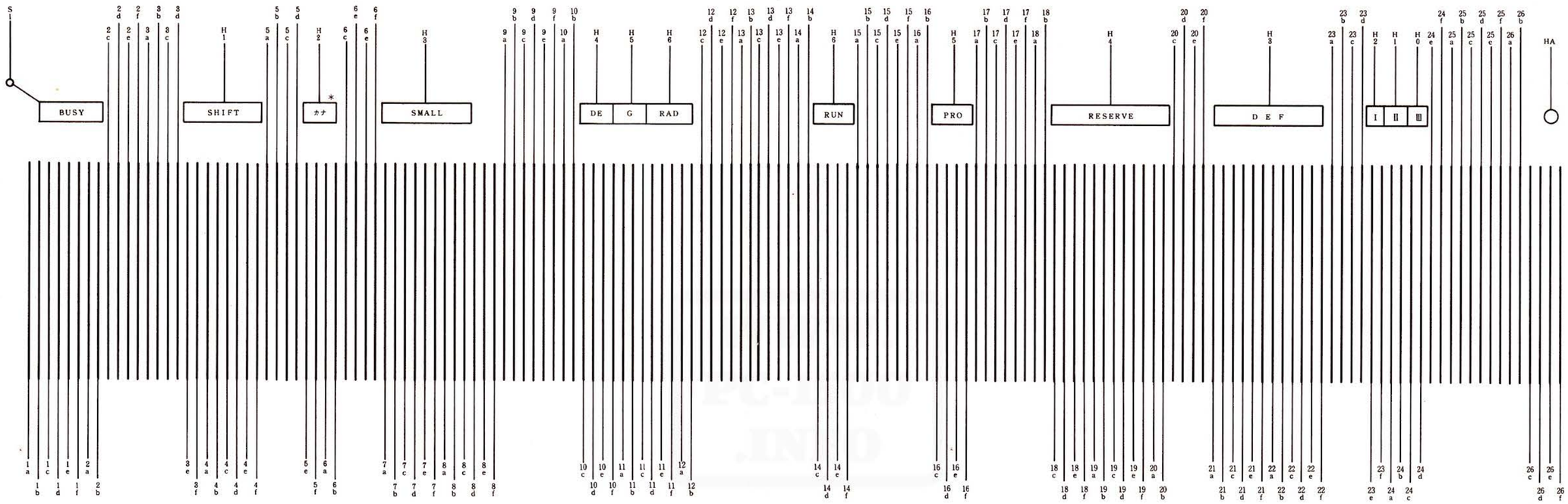

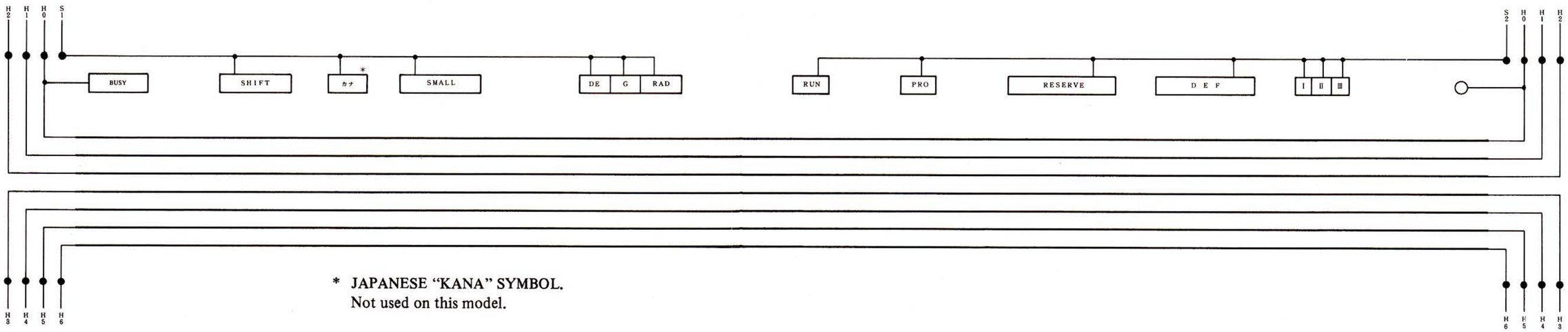

* JAPANESE "KANA" SYMBOL.
Not used on this model.

Do not sale this PDF !!!

All and more about Sharp PC-1500 at http://www.PC-1500.info

11. EXPLODED VIEW

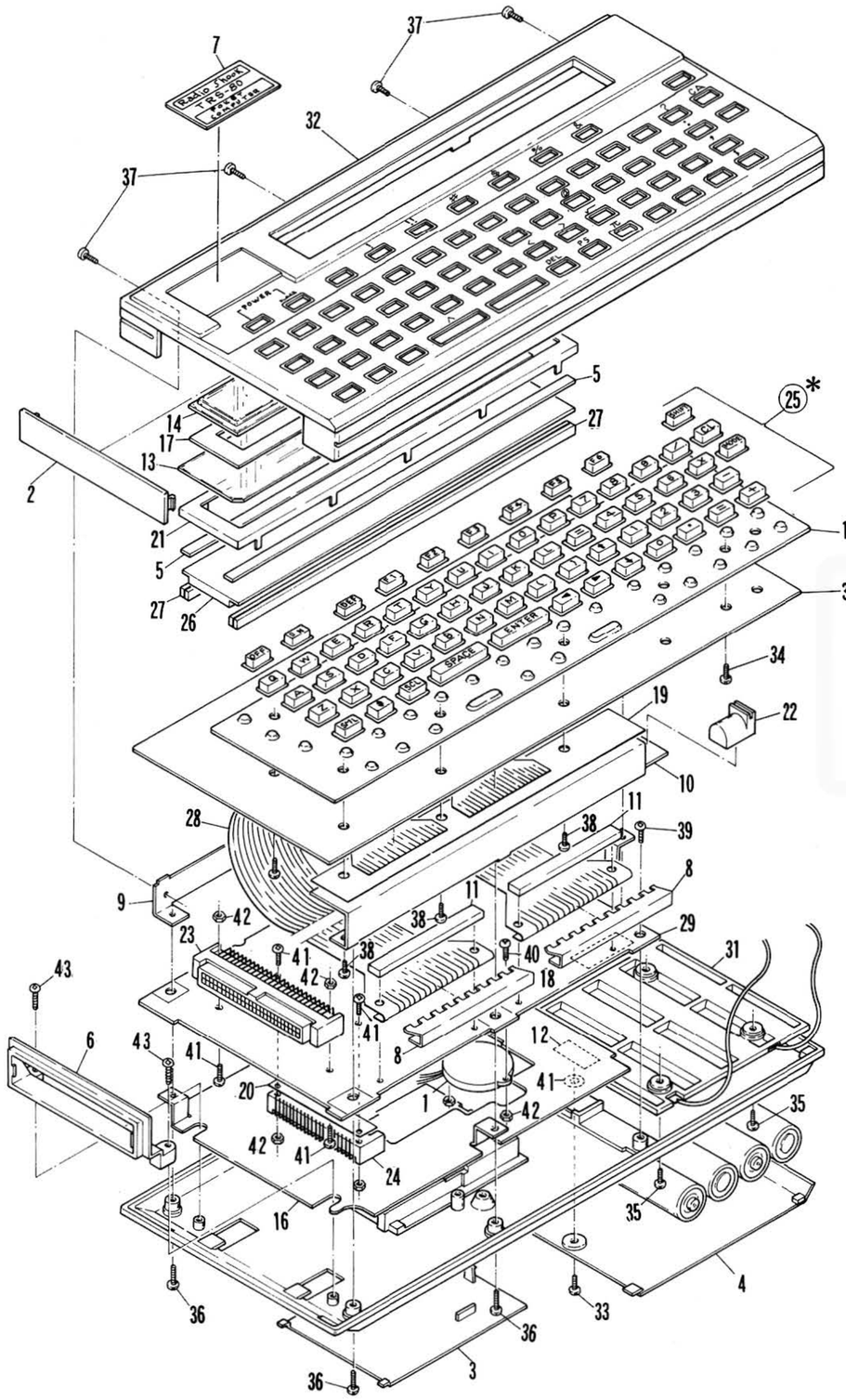

Do not sale this PDF !!!

All and more about Sharp PC-1500 at http://www.PC-1500.info

12. MAIN CIRCUIT DIAGRAM

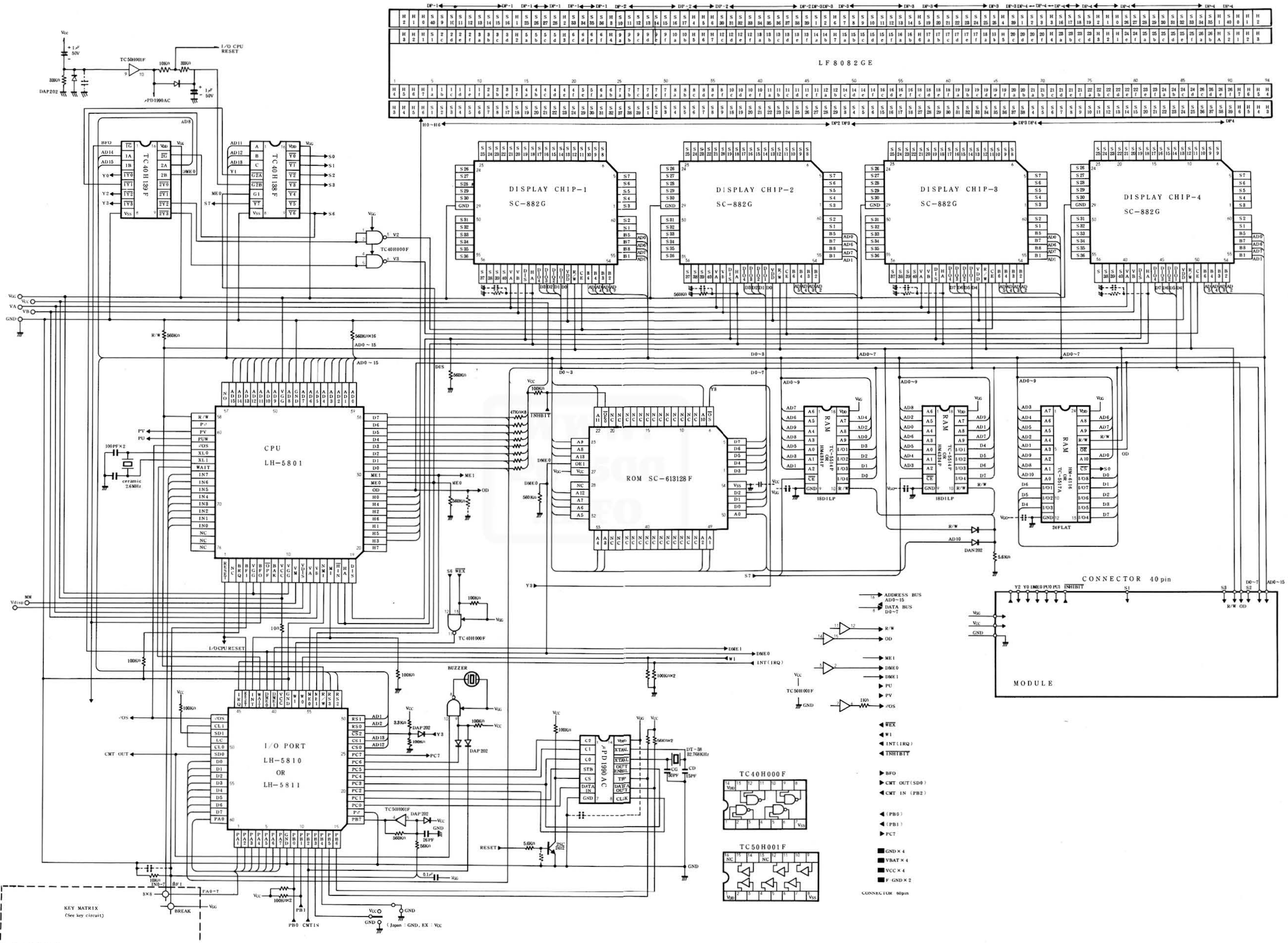

Do not sale this PDF !!!

All and more about Sharp PC-1500 at http://www.PC-1500.info

4. CIRCUIT DIAGRAM

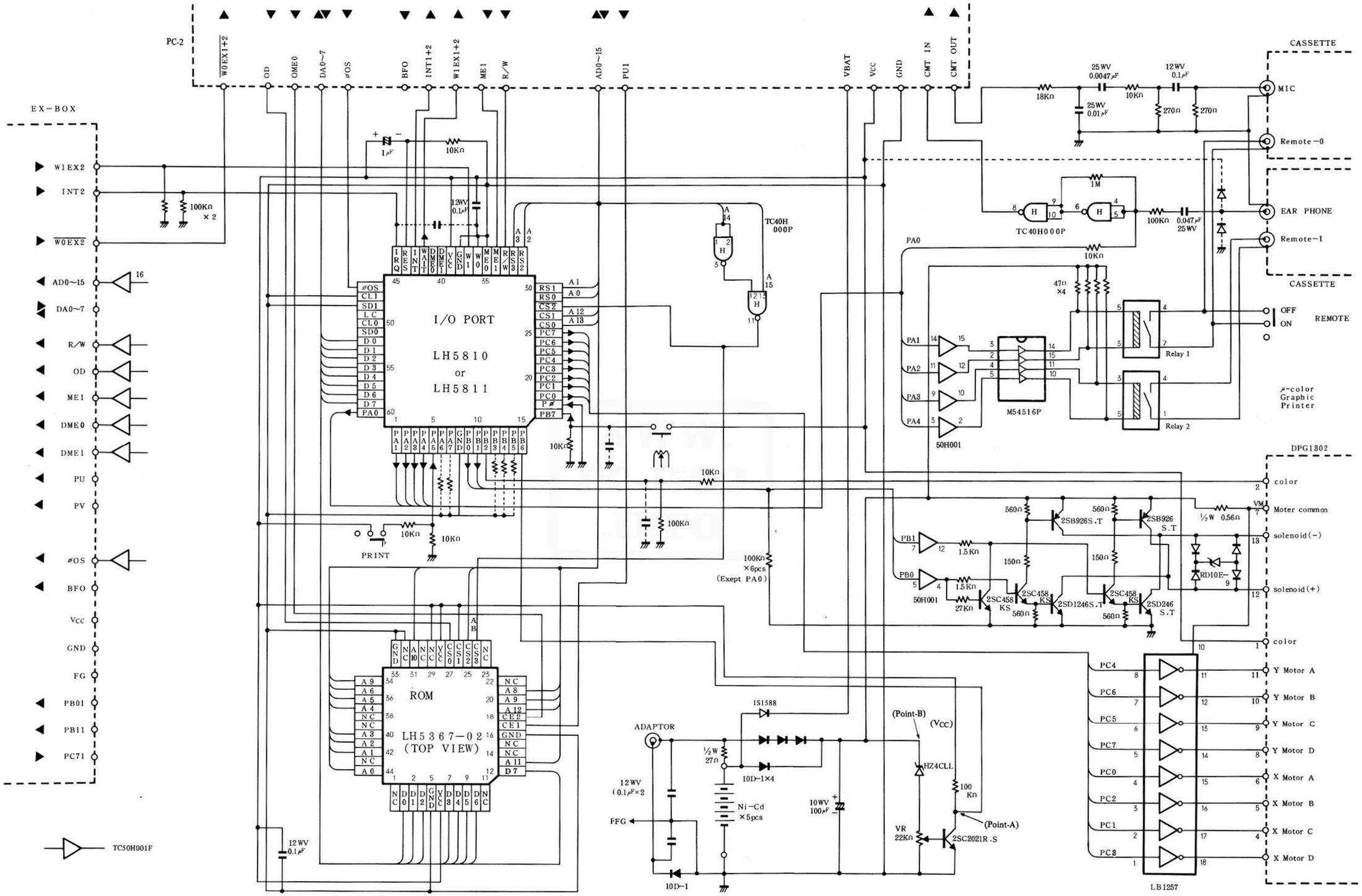

Point-A should be adjusted to become 1.0V by VR(22KΩ) with following condition
1. Apply point-B at 4.81 ~ 4.85V, D.C
2. Apply V_{CC} at 3.9 ~ 4.1V, D. C
3. Temperature around 20°C

Do not sale this PDF !!!

All and more about Sharp PC-1500 at http://www.PC-1500.info

5. PARTS AND SIGNALS POSITION

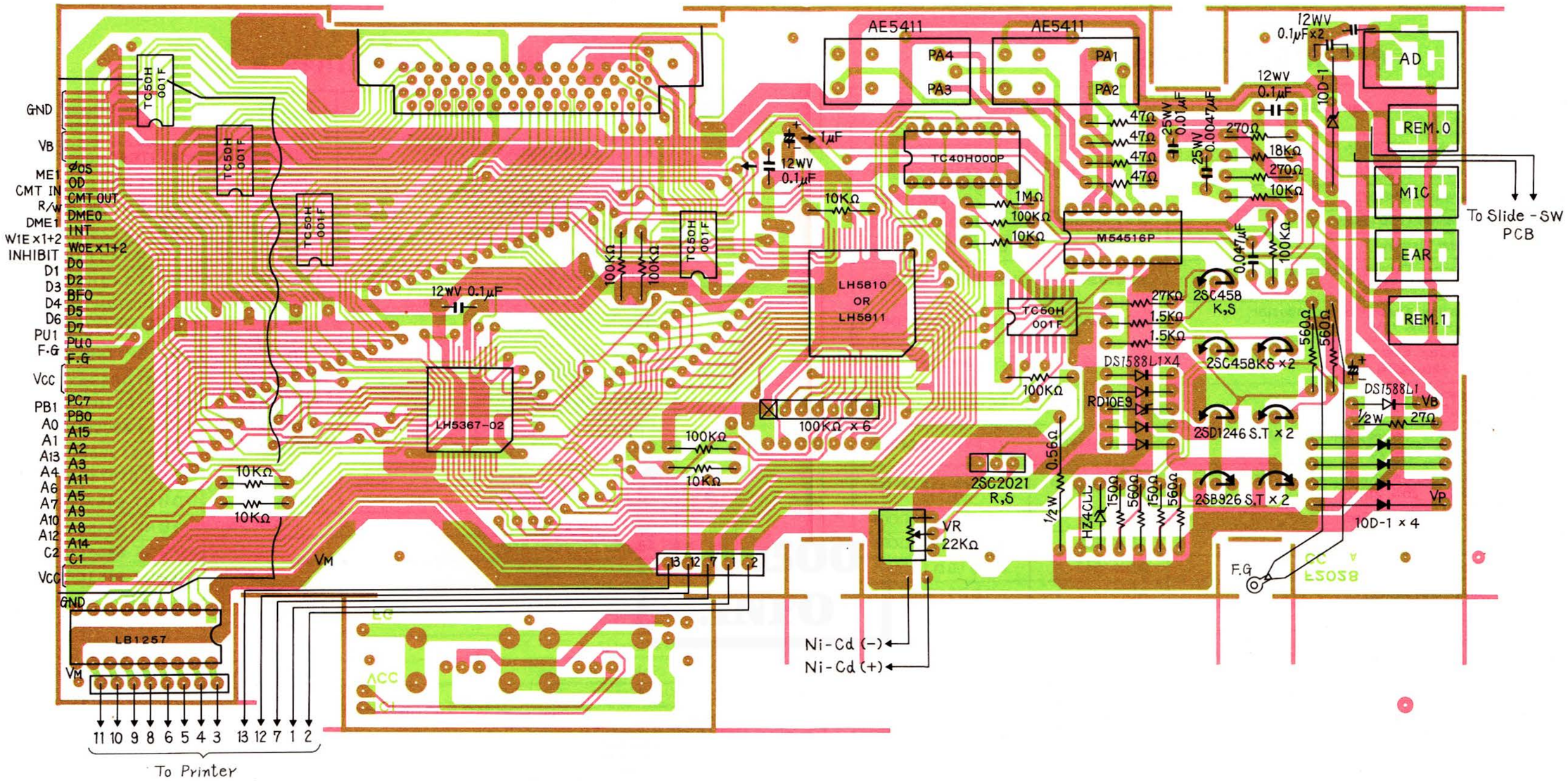

Do not sale this PDF !!!

All and more about Sharp PC-1500 at http://www.PC-1500.info

Ref. No.	Description	RS Location	Manufacturer Part Number
	Resistor, Carbon 1.5K ohm 5% 1/4W		VRD-ST2EY152J
	Resistor, Carbon 18K ohm 5% 1/4W		VRD-ST2EY183J
	Resistor, Carbon 270 ohm 5% 1/4W		VRD-2T2EY271J
	Resistor, Carbon 27K ohm 5% 1/4W		VRD-ST2EY273J
	Resistor, Carbon 47 ohm 5% 1/4W		VRD-ST2EY470J
	Resistor, Carbon 560 ohm 5% 1/4W		VRD-ST2EY561J

7. EXPLODED VIEW

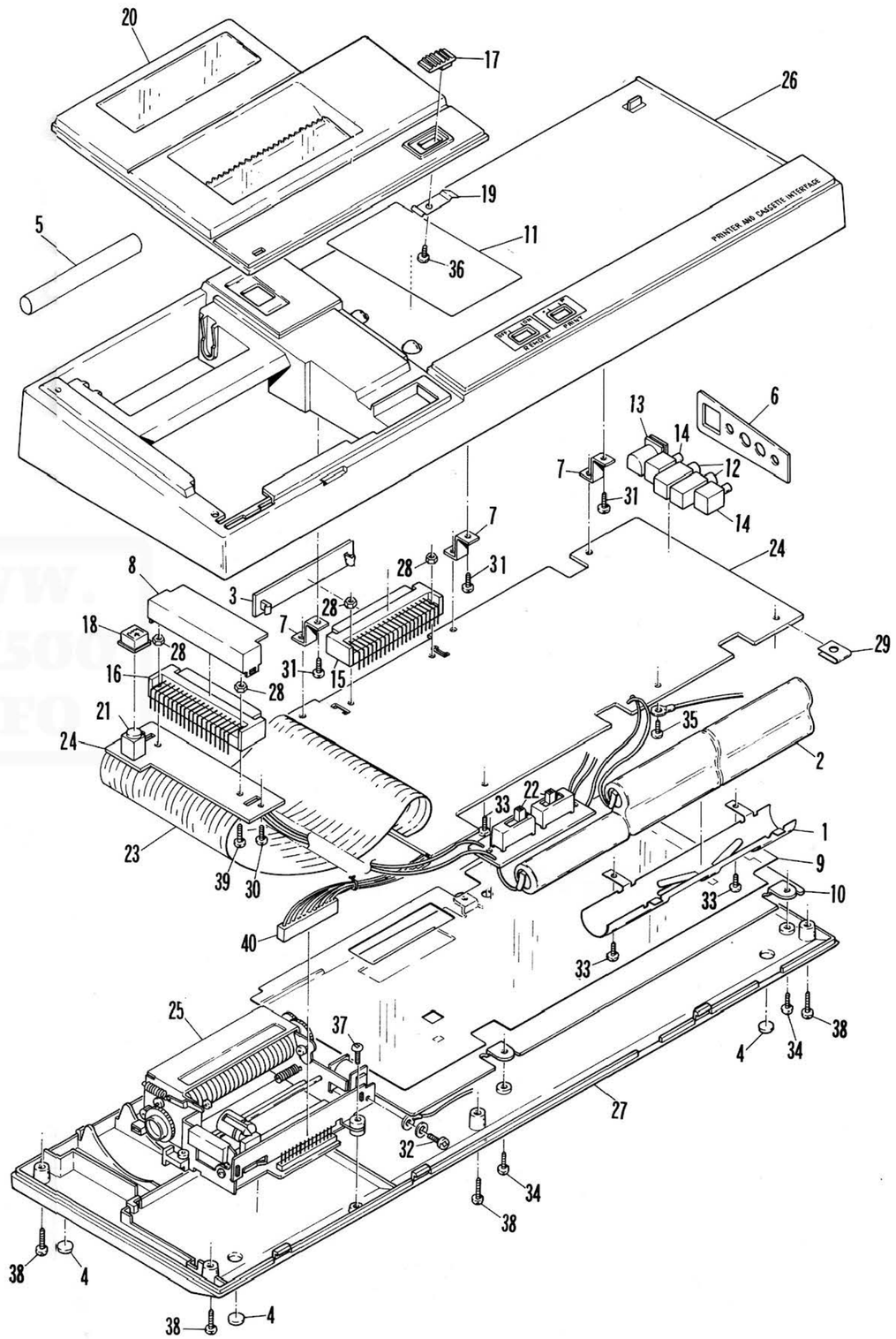

Do not sale this PDF !!!

All and more about Sharp PC-1500 at http://www.PC-1500.info

8. MECHANICAL PARTS LIST

Ref. No.	Description	RS Location	Manufacturer Part Number
1-1	Frame unit	AZ-6541	00PDG053/////
2-1	X-motor	AM-4678	00PDG005/////
2-2	X-idler gear	ARA-0395	00P07-0132-01
2-3	Bobbin gear unit	ARA-0396	00PDG013/////
2-4	Wire unit	AW-2816	00PDG020/////
2-5	Sleeve	AHC-1463	00P26-0001-01
2-6	Pulley unit (Left)	ARA-0397	00PDG015/////
2-7	Pulley unit (Right)	ARA-0398	00PDG019/////
2-8	Shaft A	AHC-1464	00P10-0335-01
2-9	Shaft B	ACH-1465	00P10-0336-01
3-1	Y-motor	AM-4679	00PDG006/////
3-2	Y-idler gear	ARA-0399	00P07-0131-01
3-3	Rubber roller unit	ARA-0400	00PDG009/////
3-4	Paper plate (Left)	ART-4128	00PDG010/////
3-5	Paper plate (Right)	ART-4129	00PDG011/////
3-6	Paper pressure roller A	ARA-0401	00P10-0297-01
3-7	Paper pressure roller B	ARA-0402	00P10-0296-01
4-1	Magnet unit	ART-4130	00PDG025/////
4-2	Push lever unit	ART-4131	00PDG030/////
4-3	Joint lever	AHC-1466	00P12-0147-01
4-4	Push roller	ARA-0403	00P10-0287-01
4-5	Slider head unit	AH-4483	00PDG059/////
4-6	Reed SW. unit	AS-2755	00PDG063/////
4-7	Pawl	ART-4132	00P19-0219-02
6-1	Pen eject lever	ART-4133	00PDG060/////
6-2	Pen eject spring	ARB-7486	00P19-0214-02
6-3	Pen eject plate	AHC-1467	00P11-0062-02
7-1	Motor cover	ART-4134	00P11-0045-01
7-2	Rubber bushing	AHC-1468	00P23-0018-01
7-3	Rubber pad	AHC-1469	00P23-0017-01
7-4	Connector	AJ-7163	00P63-1002-01
	Washer (3.0)		00PCB68185///
	Washer (2.5)		00P24-0209-01
	Washer (1.7)		00P23-0025-01
	E-ring (2.0)		00P27-0003-19
	E-ring (1.5)		00P27-0002-19
	E-ring (1.2)		00P27-0001-19
	Screw (M2 x 3)		00P30-0308-00
	Screw (M2.3 x 3)		00P30-0408-00
	Screw (M2.5 x 3)		00P30-0507-00
	Screw (M1.4 x 1.6)		00P30-0904-01

9. EXPLODED VIEW

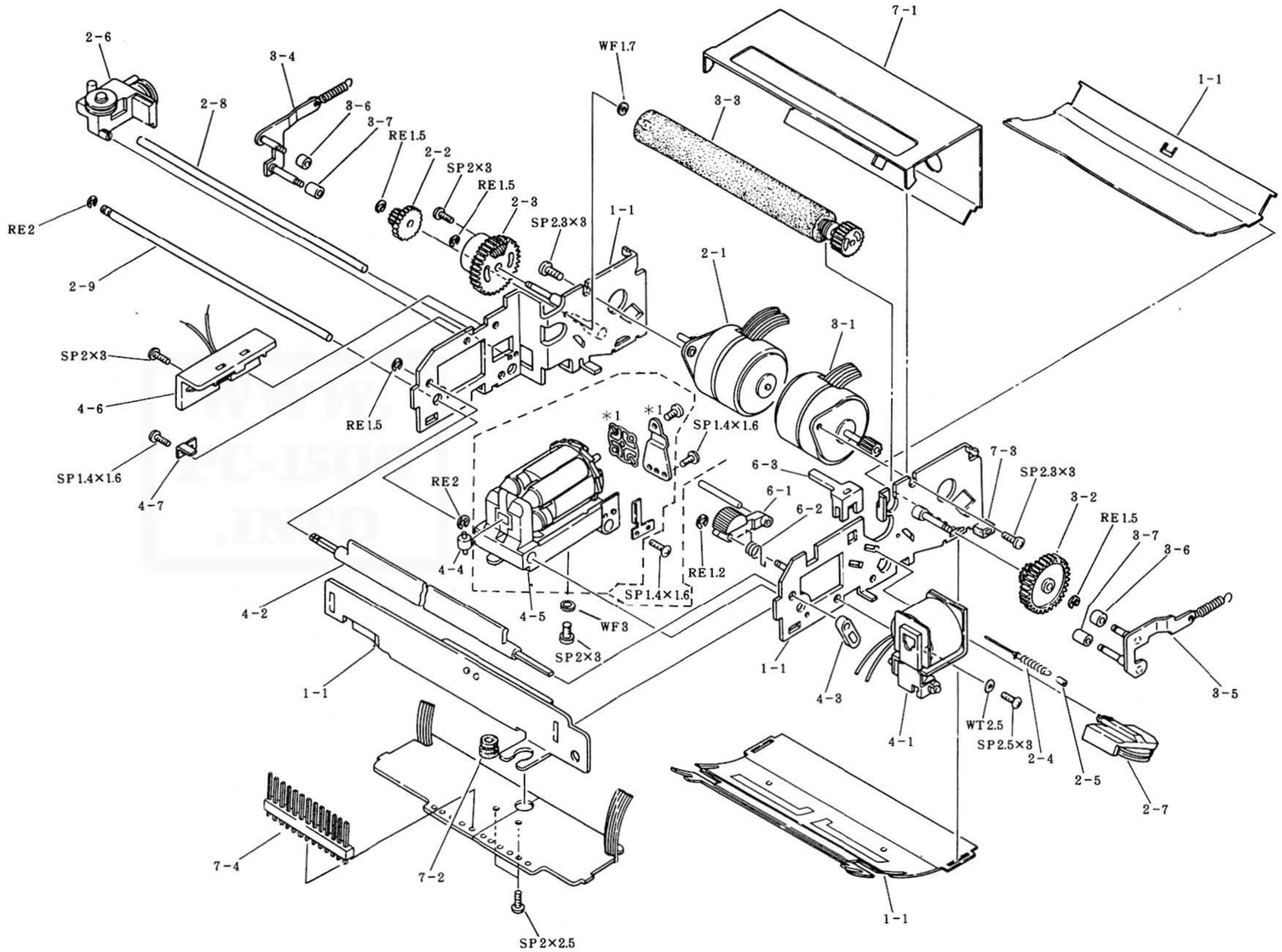

*1 PART IS INCLUDED IN 4-5

Do not sale this PDF !!!