SHARP

SERVICE MANUAL

CE-150

Color graphic printer

SHARP CORPORATION

SERVICE MANUAL
DPG 1301
COLOR GRAPHIC PRINTER
(CE-150 Printer)

TABLE OF CONTENTS

File this manual into the service manual "PC-1500 & Option"

The Color Graphic Printer DPG1301 is an X-Y polotter that uses ball-point pens as its writing instruments. Driven by stepping motors, it is capable of high accuracy plotting with a resolution of 0.2 mm and printing at a speed of 12 cps. The carriage has a four-pen capacity. Color selection is done by moving the carriage in an X axial direction, permitting random color graphic plotting. The printer has the folowing features:

1) 4-color graphic plotting
2) Compactness and light weight
3) High resolution of 0.2 mm x 216 steps
4) Printing of a maximum of 36 columns/line
5) Powered by a nickel-cadmium battery
6) 58 mm width plain paper can be used

1. FEATURES AND OUTLINE

The color graphic printer is an X-Y plotter that uses ball point pens.
It permits high speed printing of as many as 12 characters per second with high resolution power of 0.2mm as driven by the stepping motor.
Four pens of different colors are fitted on the carriage which permits you to draw graphics of different colors as the color is selected in moving on the X-axis.

1. Four color graphic plot
2. Compact and light weight
3. High resolution of 0.2mm × 216 steps
4. Printing width of 36 columns/line at a maximum
5. Allows operation by means of NiCd battery
6. Use of ordinary paper of 58mm wide

2. SPECIFICATIONS

1. Model name: DPG 1301

2. Printing functions

Print method:	Ball point pen recording with four color rotary select system
Drive system:	Drum type X-Y plotter
Printing speed:	12 characters/second for specified characters (Reference)
Printing columns:	36 columns/line for specified characters 36, 18, 12, 9 columns selective
Stepping speed:	260 steps/second
Stepping distance:	0.2mm for X-axis and 0.2mm for Y-axis
Line drawing speed:	52mm/second (X and Y axis) 73mm/second for 45° direction
Character size:	One example of printed character

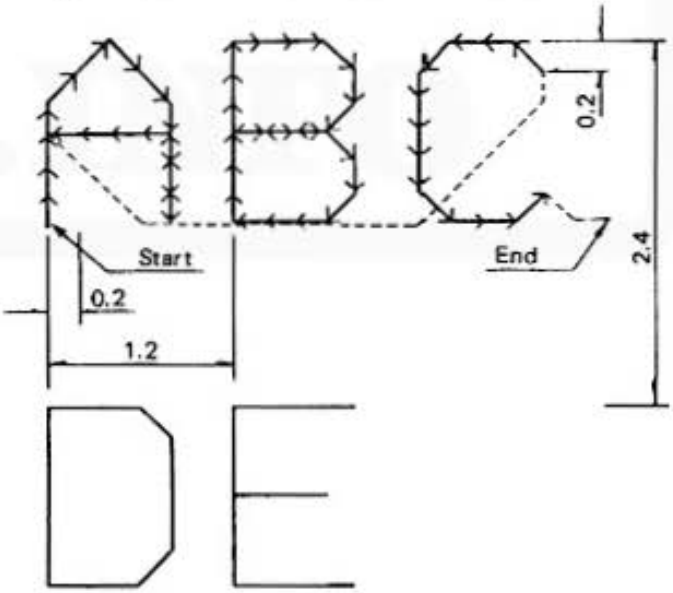

1) Character size: 1.05 × 1.45, for line width of 0 25
2) Character-to-character spacing: 1.2±10%
3) Line spacing: 2.4±10%

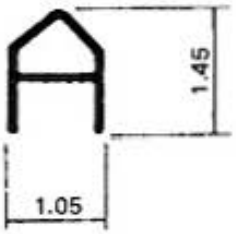

3. Effective range of plotting

1) Plotting direction

In reference with the carriage moving direction, the rightward direction is determined to be X-axis(+) and the leftward direction is determined to be X-axis(−).

2) Effective range of plotting

X-axis: 43.2mm, 216 steps
Y-axis: Any range as determined by software.

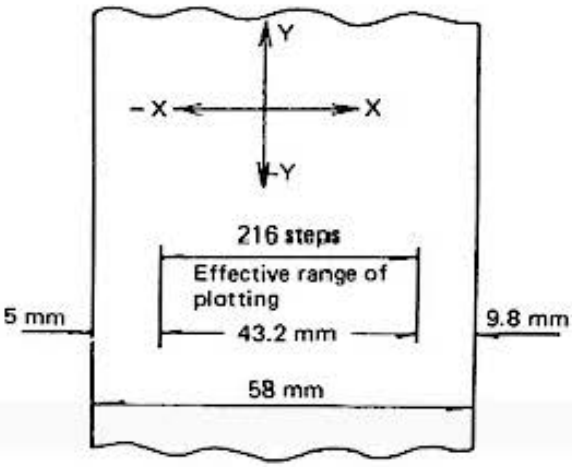

3) Accumulative error in Y-axis

As the paper is fed by means of friction with rubber for the Y-axis, there may arise a slight deviation, which should be within a range of ±3mm as measured in the following manner, provided that specific paper guide is in use.

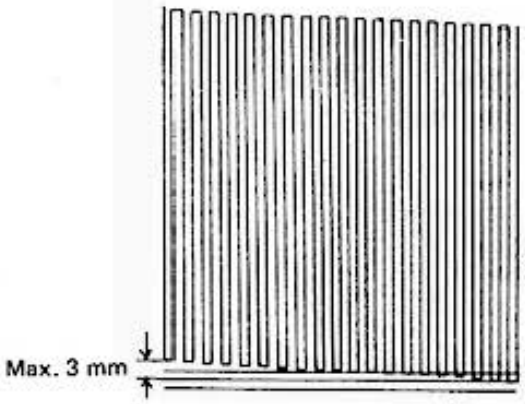

Example – Programme

```
10:GRAPH :
   GLCURSOR (8,0)
20:FOR A=1TO 20
30:RLINE -(0,-200
   )-(5,0)-(0,200
   )-(5,0)
40:NEXT A
50:RLINE -(0,-185
   )-(-205,0)-(0,
   -15)
60:RLINE -(210,0)
   -(0,-15)-(-215
   ,0)
70:END
```

4. Recording paper and ball point pens

[Recording paper]

Kind:	Ordinary paper
Dimensions:	Paper width: 58^{+0}_{-1}mm (2-1/4")
	Core size: 70mm (2-3/4"), max.
	Paper length: About 55m (for the core size of 70mm)
Recommended paper:	High quality paper of about 45kg with thickness of 65 to 80 micron. (1,000 sheets of 788 x 1,091 mm paper equals to 45kg.) (Weight: equivalent to 52.3 g/m^2)

[Ball point pen]

Color:	Black, blue, red, green
Size:	5ϕ x 23.3
Kind of ink:	Water color
Life:	250m (820 ft.) or more

5. Electrical characteristics

5-1. Input/Output teminals

Name		No.	Circuit diagram
Color position sensor	B	1	
	A	2	
X motor	D	3	
	C	4	
	B	5	
	A	6	
Motor common		7	
Y motor	D	8	
	C	9	
	B	10	
	A	11	
Magnet (+)	B	12	
Magnet (−)	A	13	

Pen down upon current supply to the magnet in above polarity.

5-2. Magnet

1. Voltage: 4.85±0.65V
2. Type: Self-holding magnet
3. DC resistance: 5Ωb10% (20°C)
4. Peak current: About 1.1A (20°C, 4.85V)
   About 1.4A (0°C, 5.5V, worst case)

5-3. Motor (260 steps/second)

	Item	X-axis	Y-axis	Condition
1	Voltage	5.85V±0.65V		0 ~ 50°C
2	Type	4-phase stepping motor (2 phase excitation)		
3	DC resistance	(A1) 30Ω±10%	25Ω±10%	20°C (resistance per phase)
4	Peak current	(A2) Abt. 0.16A	Abt. 0.19A	20°C, 4.85V
	(per phase)	(A3) Abt. 0.23A	Abt. 0.27A	0°C, 5.5V, (worst case)
5	Average current	(A4) Abt. 0.12A	Abt. 0.13A	20°C, 4.85V
	(per phase)	(A5) Abt. 0.16A	Abt. 0.18A	0°C, 5.5V, (worst case)

5-4. Power consumption

Print patter	Scale	Voltage	Current consptn (mA)	Power consptn (W)
ACII 64 character set	S=0	4.8V	500 ~ 550	2.4 ~ 2.6
ACII 64 character set (excluding CR)	S=1	4.8V	400 ~ 450	1.9 ~ 2.2
ACII 64 character set	S=1	4.2V	340 ~ 370	1.4 ~ 1.6
ACII 64 character set	S=1	5.8V	500 ~ 580	2.9 ~ 3.4
"5" printed in 5 columns	S=1	4.8V	385	1.8
Paper feed action	–	4.8V	260	1.2
X-axis forward and backward	–	4.8V	180	0.9
45° line drawing	(L=0)	4.8V	490	2.4
45° dot drawing	(L=1)	4.8V	790	3.8

5-5. Color position sensing switch

1. Operating voltage: DC 24V, max.
2. Operating current: 100mA, max.
3. Contact resistance: 150mℓ, max.

6. Durability

No.	Item and test method	Test item	Specification
1	Life 6.5 million characters ASCII 64 character set are continuously printed in the minimum scale (S=0). At any time during the test (ie. 1, 2, 4, and 6.5 million characters), appearance, operating conditions, and print quality are tested.	1. Appearance 2. Print quality	Life: 6.5 million characters Must be good.
2	Pen life Continuous operational test is carried out in the print mode shown in Attached Drawing 4-1, with a new pen in use.	1. Ink life	Must be able to draw more than 250 meters.

3. MECHANISM AND OPERATION

The printer roughly consists of six blocks – a frame, X-direction drive, Y-direction drive, pen drive mechanism, color change mechanism, and pen take-out mechanism sections. An explanation of these blocks will be given below.

1. Frame Section

The frame section has a side plate (right), side plate (left), holding plate, and paper guide. The various mechanisms are mounted both inside and outside. The lower edge of the frame is bent in the shape of the letter L and acts as a mounting leg.

2. X Drive Mechanism Section

The principal elements of the X-direction drive mechanism are the X stepping motor, idle gear, bobbin gear, pulley support base (left), pulley support base (right), slider unit, wire, etc.

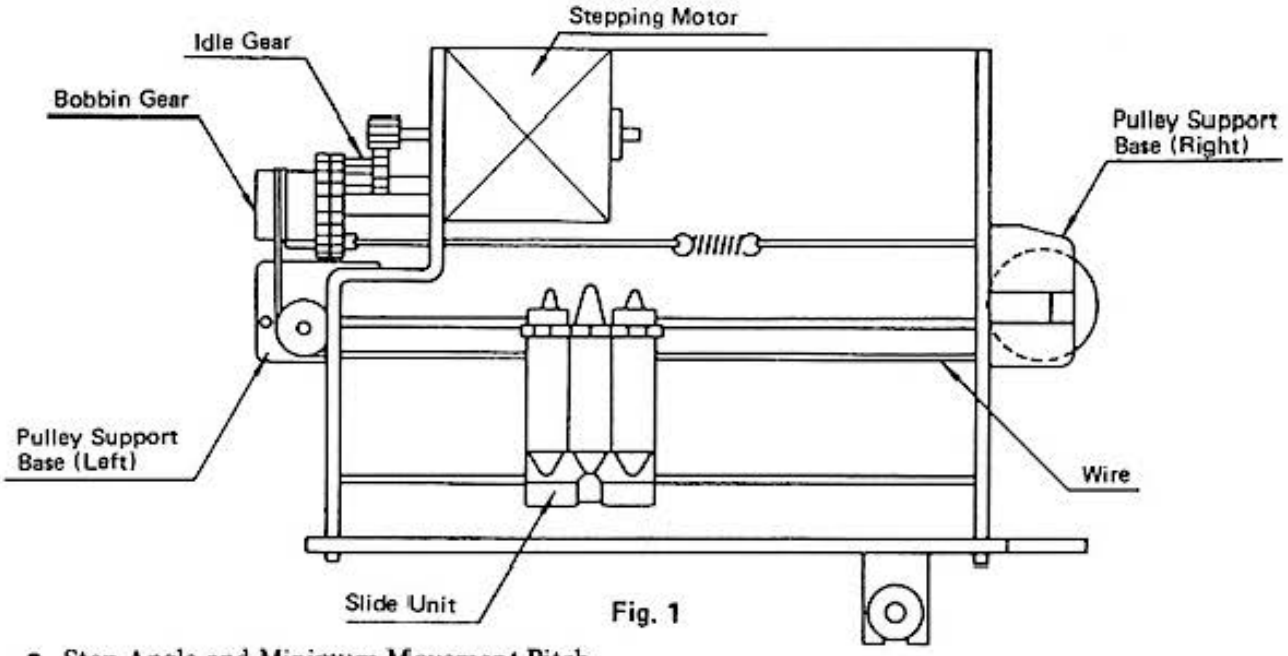

Fig. 1

- Step Angle and Minimum Movement Pitch
  The reduction ratio between the stepping motor and bobbin gear is 1:9.01, and for each stepping motor pulse (18°/360), the slider unit, that is, pen X direction movement, is 0.2mm. The motive power is transmitted to the bobbin gear and slider unit by a wire, and the wire tension is maintained by a coil spring.

3. Y Drive Mechanism (Paper Feed Mechanism) Section

The Y-direction drive mechanism consists of the Y stepping motor, idle gear, rubber roller unit, paper holding roller (right) and paper holding roller (left). The reduction ratio between the Y stepping motor (called the Y motor below) and rubber roller gear is 1:7.86. As is the case with the X direction, the rubber roller movement per pulse of the Y motor, that is, the Y direction movement quantity of the recording paper, is 0.2mm.

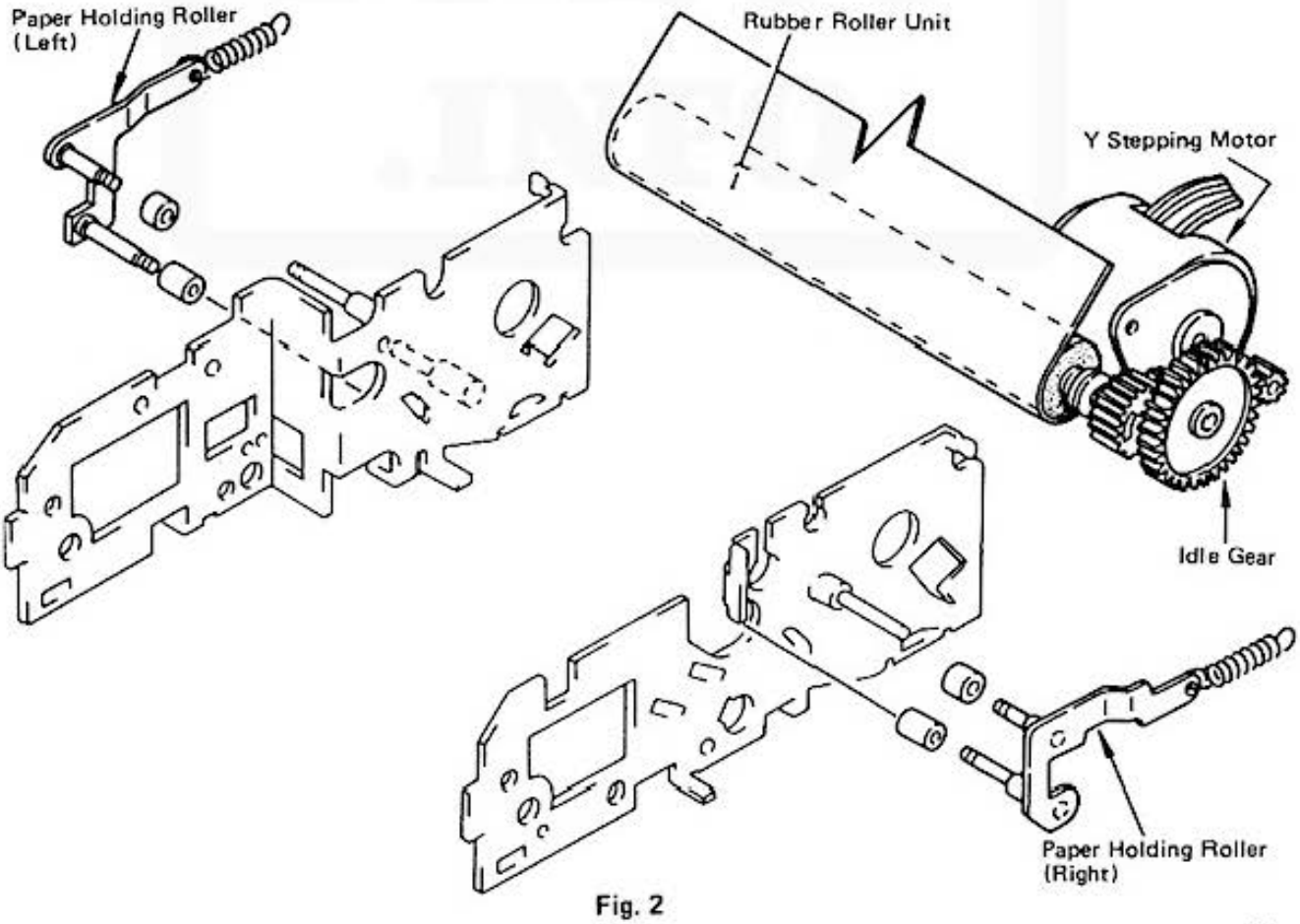

Fig. 2

4. Pen Drive Mechanism Section

The pen drive mechanism, namely the pen up-down mechanism, comprises a self-holding type electromagnet, ejection lever, roller lever, and ball-point pens. Pen up and down directions are as shown below.

- **Pen-up State**
  The pen retracts when the electromagnet is energized for 5 ms against the actuator spring, and held by a permanent magnet even after the current is cut off after the initial 5 ms.

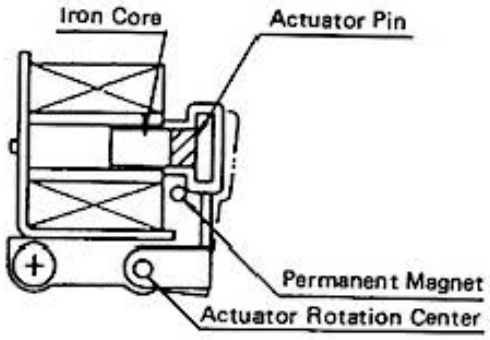

Fig. 3

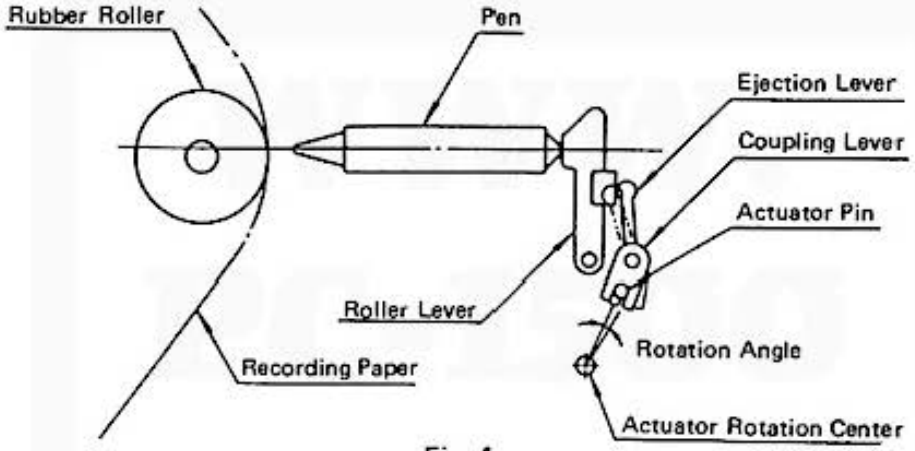

Fig. 4

- **Pen-down State**
  From its pen-up state the pen descends when a current is impressed to the electromagnet for 5 ms in an opposite direction to that used for pen retraction. After 5 ms, the pen-down state will be maintained by the actuator spring force.

5. Color Change Mechanism Section

The color change mechanism section consists of the X-direction drive mechanism, a pen holder and holder stopper, both in the slider unit, and projections inside the holding plates. The operating principles are explained below.

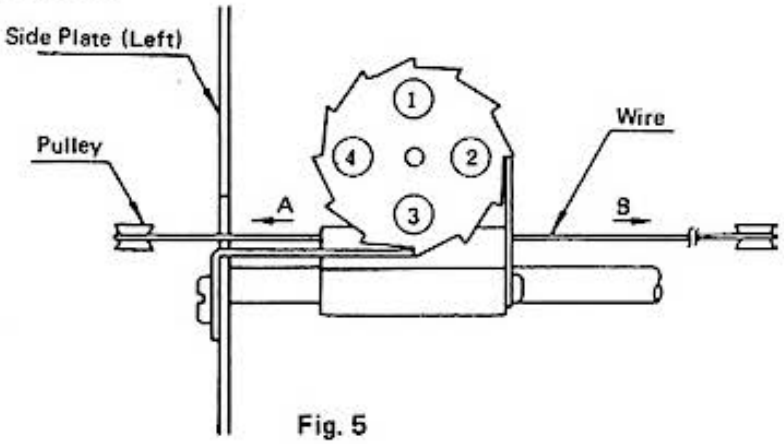

Fig. 5

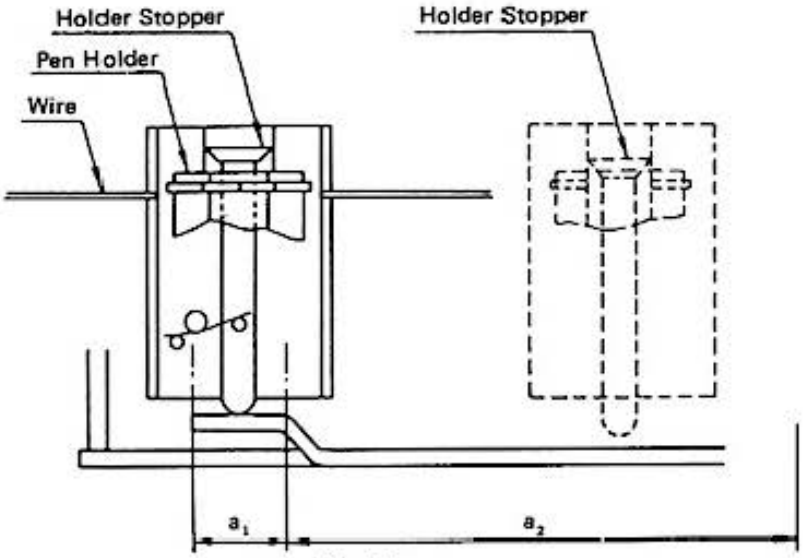

Fig. 5

To operate the color change mechanism, first, the slider is moved to the area a-1 in Figure 6 (45 pulses to the left from the origin). Then, the holder stopper in the slider contacts the projection on the holding plate, and the wedge section of the holder stopper slips out of the pen holder, which frees it to rotate. Next, by repeating the movement of the X motor for 30 pulses each in direction A and to the left, the pen (1) in Figure 5 changes to pen (2). The spring moves the holder stopper to the right until it returns to the origin. If then enters the pen holder groove. The pen holde is then fixed, and printing is ready.

6. Pen Ejection Mechanism

The pen ejection mechanism consists only of the pen ejection lever that is mounted on the side plate (right). The slider unit is moved fully to the side plate (right) and is stopped in order to change the pen. Push the pen ejection lever towards you, and the pen will eject.

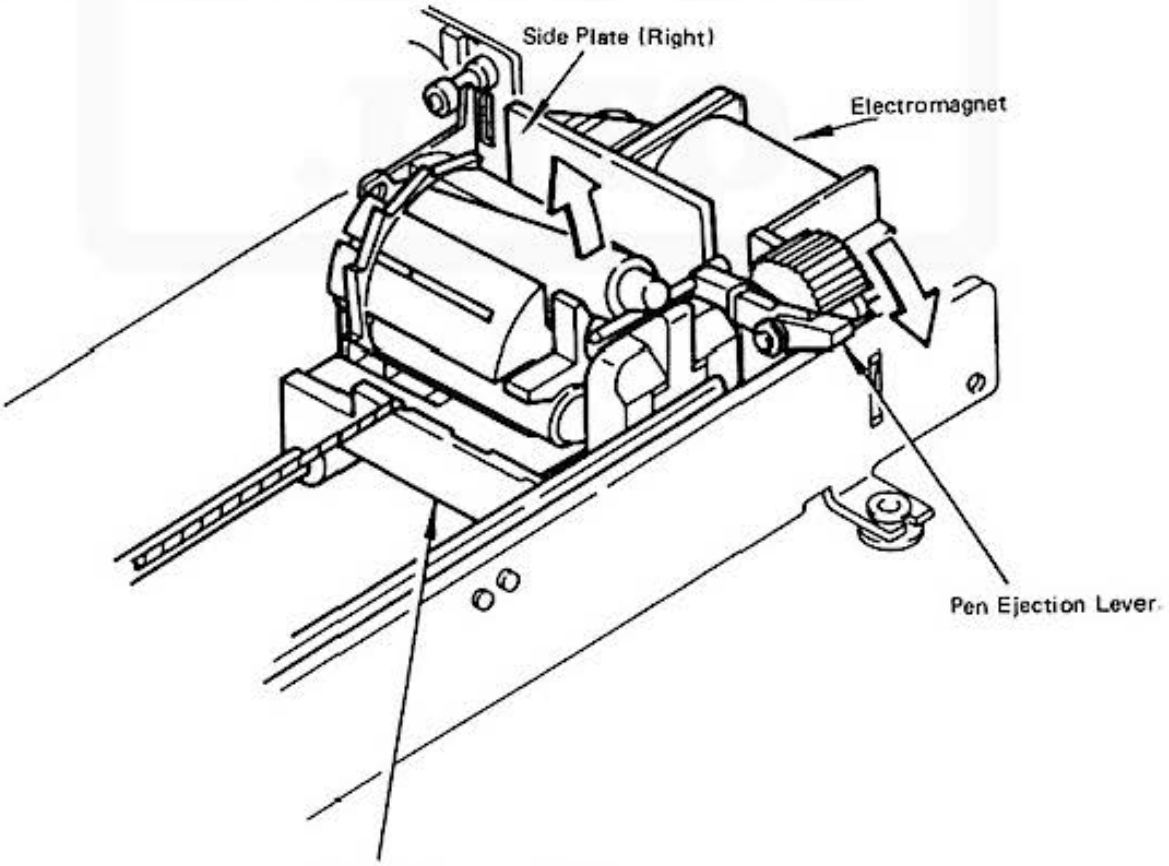

Fig. 6

4. DISASSEMBLY AND REASSEMBLY

1. Disassembly

Remove the following parts from the frame in the sequence shown below.

Disassembly Sequence	Part No.	Part to be Removed	Point for Disassembly
1	4-1 2-4 6-1 2-7 3-2 3-5	Electromagnet Unit Wire Unit Pen Take-out Bar Unit Pulley Support Base (Right) Unit Y Idle Gear Paper Holding Roller Support Plate (Right) Unit	• Disassemble after removing cross-recessed pan head machine screws (SP2 x 3) and (SP2.3 x 3), and sleeves (2-5). • Note – brass fittings may slide off. (Don't lose)
2	7-1	Motor Cover	• Lift up the motor cover (7-1) section covering the cross-recessed pan head machine screws (SP2.3 x 3) which hold the motor. • Remove the entire motor cover (7-1) by inserting a flat-blade screwdriver in the paper guide as shown in the diagram below. 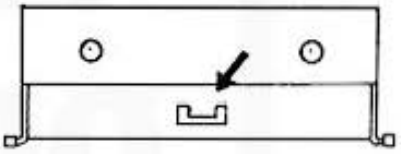
3	3-3	Rubber Roller Unit	• Push the rubber roller unit bearing to the left and remove from the right side of the rubber roller unit (3-3) as it comes off the frame unit (1-1).
4	3-1 7-4 2-3 2-2 3-4	Y Motor Unit Flat Wafer Assembly Bobbin Unit X Idle Unit Paper Holding Roller Support Plate (Left) Unit	• Suction solder in the junction section of the two printed circuit boards. • Note – brass fittings may slide off. (Don't lose)
5	2-1 2-6 2-8 2-9 4-5 4-2 4-3 4-7 4-6 7-2 7-3	X Motor Unit Pulley Support Base (Left) Unit Slider Shaft (A) Slider Shaft (B) Slider Unit Ejection Lever Shaft Unit Ejection Lever Color Change Reed Switch Unit Rubber Bushing Rubber Pad	• Push in plastic tabs from inside of flame.

2. Reassembly

Reassembly can be completed most efficiently by referring to the reassembly sequence and precautions shown below.

Reassembly Sequence	Parts Symbol	Parts to be Reassembled	Precautions for Reassembly
1	3-1 SP2.5 x 3 2-1 SP2.5 x 3	X Motor Unit Cross-recessed Pan Head Machine Screws Y Motor Unit Cross-recessed Pan Head Machine Screws	Screws may be coated with lock Paint.
2	7-3 7-2 2-6 3-3 WF1.7 3-5	Rubber Pad Rubber Bushing Paper Holding Roller Support Rubber Roller Unit Plain Washer Paper Holding Roller Plate (Right) Unit	Fit the end of the rubber roller unit into the left side and push the bearing to the left side to fit the other end into the right side. Grease coating
3	2-2 RE1.5 2-3	X Idle Gear Type E Stopper Ring Bobbin Gear Unit	Move the bobbin gear by one tooth and insert the X idle gear. Recommend to engage after marking the tooth-tip and moving the gear by one tooth.

Reassembly Sequence	Parts Symbol	Parts to be Reassembled	Precautions for Reassembly
4	3-2 RE1.5	Y Idle Gear Type E Stopper Ring	Insert the Y idle gear after moving the paper feed gear by one tooth. 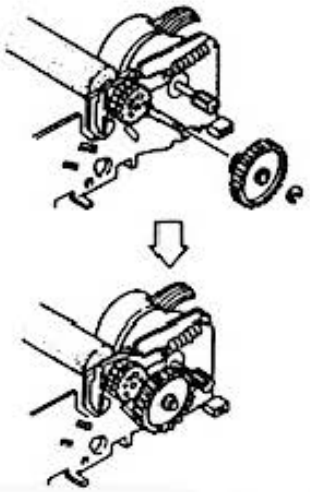 Recommend to engage after marking the tooth tip and moving the gear by one tooth.
5	7-1	Motor Cover	Hang the motor cover by its square hole on the hook on the paper guide B on the rear of the frame unit.
6	4-2 4-3 RE2	Ejection Lever Shaft Unit Ejection Lever Type E Stopper Ring	Insert the ejection lever shaft unit into the frame through a bearing hole and press in the coupling lever from outside the frame. 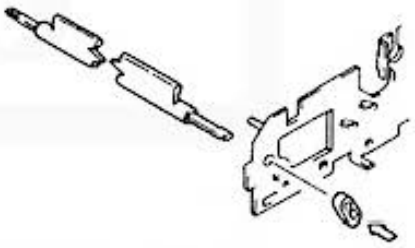
7	6-1 6-2 RE1.2	Pen Take-out Lever Unit Pen Take-out Lever Spring Type E Stopper Ring	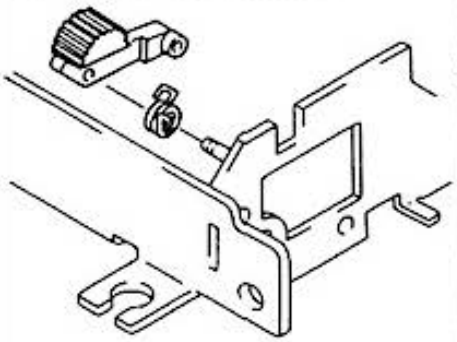
8	4-7 SP1.4 x 1.6	Color Change bar. Cross-recessed Pan Head Machine Screws	Screws may be coated with lock paint.

Reassembly Sequence	Parts Symbol	Parts to be Reassembled	Precautions for Reassembly
9	4-5 2-8 2-9 RE-2	Slider Unit Slider Shaft (A) Slider Shaft (B) Type E Stop Ring	Never bring another magnet close to the slider unit magnet. If you do the magnet inside the slider unit demagnetizes causing the color detection switch to operate incorrectly.
10	2-6	Pulley Support Base (Left) Unit	
11	4-1 SP2.5 x 3 WT2.5 7-4	Electromagnet Unit Cross-recessed Pan Head Machine Screws Lock Washer Flat Wafer Assembly	Hang the electromatnet unit actuator on the coupling lever on the ejection lever unit. 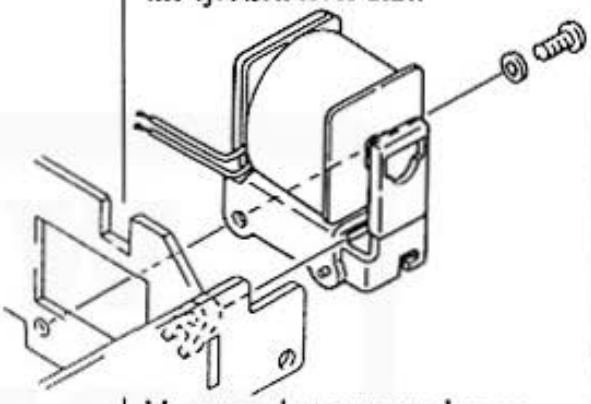 Mount so that open strokes are 0.6 mm. Clamping torque, 3.5 kg-cm. Screw lock paint coating.
12	4-6 SP2 x 3	Reed Switch Unit Cross-recessed Pan Head Machine Screws	Screw lock paint coating. Rotate the bobbin gear. The reed switch must actuate when the magnet at the left edge of the slider approaches the closest reed switch.
13	2-7	Pulley Support Base (Right) Unit	
14	2-4 2-5	Wire Unit Sleeve	Stretch wire on the pulley support plate (left) unit and bobbin gear 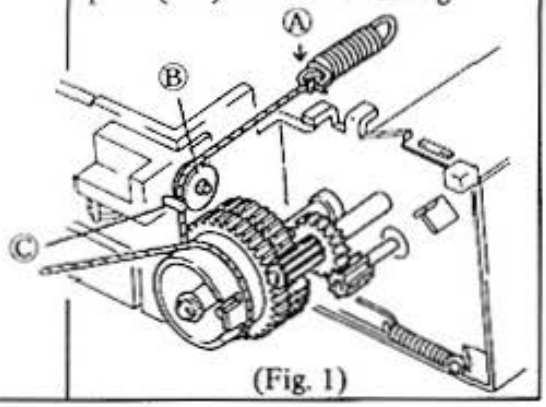 (Fig. 1)

Reassembly Sequence	Parts Symbol	Parts to be Reassembled	Precautions for Reassembly
			The wire must be stretched in the order described below: 1) As shown in Fig. 1, the spring must be pressed against the side plate using a finger tip with the knot of the wire in alignment with the side plate at point (A). 2) Next, thread the leading edge of the wire through the pulley (B) and the protrusion (C). 3) As shown in Fig. 2, align the slit (D) of the bobbin gear so that it should on a line drawn between the bobbin gear shaft (E) and the idler gear shaft (F). 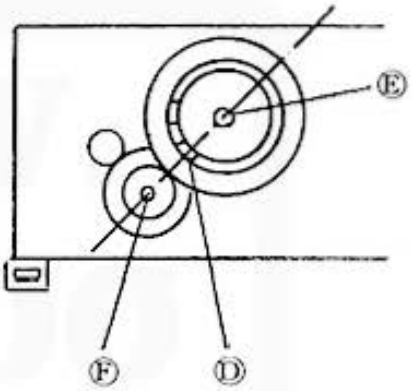 Fig. 2 4) Wind the wire around the bobbin gear for one and half a turn, then thread it through slits. 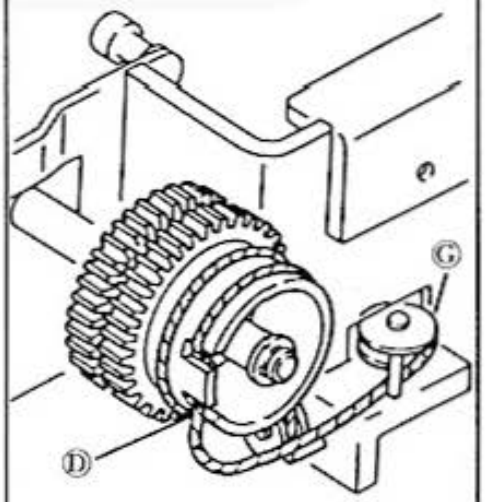 Fig. 3

Reassembly Sequence	Parts Symbol	Parts to be Reassembly	Precautions for Reassembly
			5) Wind the wire around the pulley (G), then thread through the hole in the side plate. 6) Now, set the slider unit to a distance of 5mm from the right (magnet side), then thread the wire through the hole in the slider unit as shown in Fig. 4. 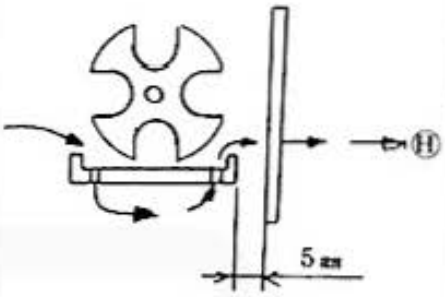 Fig. 4 Hold the wire at the point (A) and stretch the wire towards the direction (H), then adjust the location of the slider unit so that the distance between the side plate and the slider unit should become about 5mm. 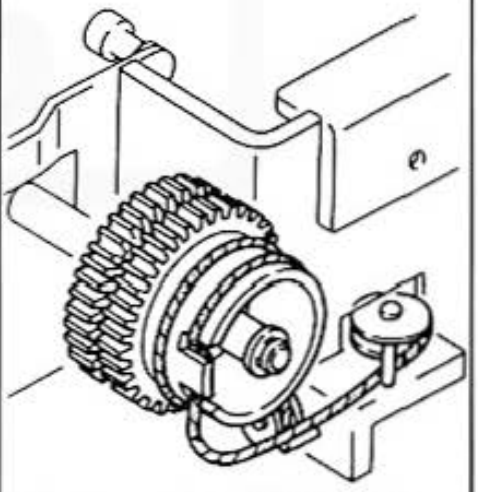 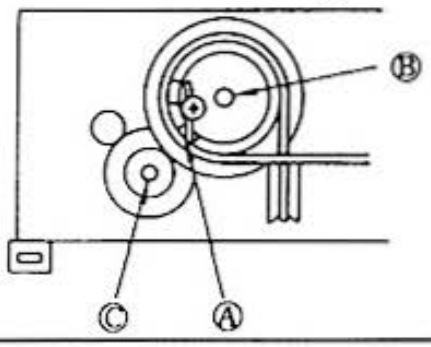

Reassembly Sequence	Parts Symbol	Parts to be Reassembled	Precautions for Reassembly
			7) Apply the wire to the pulley support bracket (right) (2-7), then thread the wire through the hole in the side plate, again. 8) Next, insert the wire into the sleeve, thread through the spring hook loop, then thread the wire through the sleeve. 9) Pull the one of the wire (i) until the tension of 160 grams is on the spring (about 2mm of spring elongation), then set the sleeve using the long nose pliers. 10)Check a proper movement of the slider. 
	SP2 x 3	Phillips head, small, pan head screw	Securing of the bobbin gear with the wire.
	SP2.3 x 3	Cross-recessed Pan Head Machine Screw	Adjust the relative positions of the wire and slider so that the drawing line in the X-direction will be at the center of the paper guide. Screw lock paint coating.
	5-1 5-2 5-3 5-4	Ball-point Pen (Black) Ball-point Pen (Blue) Ball-point Pen (Green) Ball-point Pen (Red)	Move the slider to the left edge. 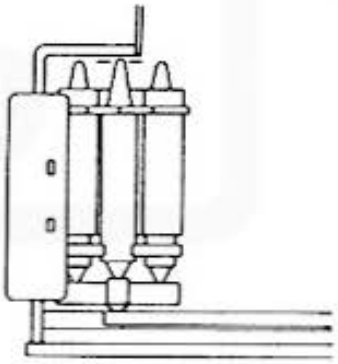 Insert the pen tip at the tip of the pen return spring and push the rear section. 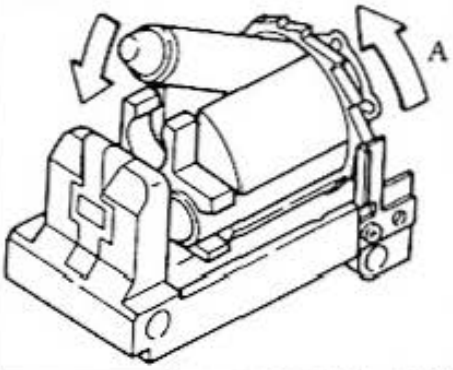

Reassembly Sequence	Parts Symbol	Parts to be Reassembled	Precautions for Reassembly
			Rotate the rotary holder in the direction of arrow A and insert the pen. Mount the pen color position making the magnet for the reed switch as the reference. 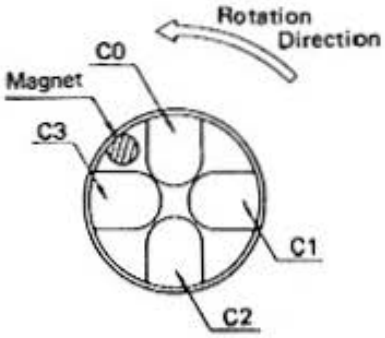

5. REPAIR AND MAINTENANCE

1. Handling Precautions

1) Carrying Printer

(1) Carry the printer by holding it in the directions shown by ⇧ . Carrying the printer in the direction will cause various troubles.

(2) The printer may be carried by holding on to the upper face of the motor cover and paper guide. However, do not apply strong pressure to it.

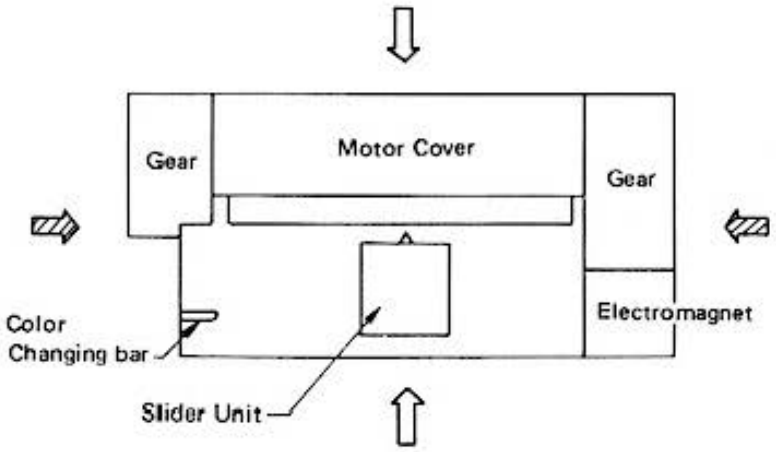

2) Sections where Pressure Should Not be Applied:

(1) Do not touch the slider unit except when taking a pen out. Particularly, never apply pressure in the direction of rotation.

(2) Do not touch the wire. The pulley may come off.

(3) Do not touch the color changing bar. When bent, color changing cannot be accomplished.

3) Sections Not to be Touched

(1) No shaft should be touched with bare hands.

(2) Do not touch the pen return spring.

(3) Do not touch the rotary holder except when the slider is positioned at the left edge of the frame and a pen is mounted.

(4) Do not touch the slider.

4) Sections Where Magnetic Substances Should be Kept Away

(1) Do not place a magnetic substance or powder, a permanent magnet, or an electromagnet close to the permanent magnet of the color position detector.

(2) A strong rare earth magnet is used in the electromagnet unit.

5) Other;

Be very careful not to drop the pen or in any way bend it. When the ink is exhausted, hold by the tail plug section and shake it.

2. Maintenance

Perform repairs and maintenance as shown below to maintain the initial printer quality as long as possible.

1) Cleaning

Clean the printer and remove paper dust, dirt, etc. periodically (about every three months or after using 5 rolls of recording paper).

(Points for Cleaning)

(1) Paper dust, dirt, etc. should be vacuumed up.
(Use an electric vacuum cleaner).

(2) Use alcohol or benzene when removing stains. Thinner, trichloroethylene and ketone solvent may damage the plastic parts and should not be used.

(3) Grease any places where there is no grease or where it is not sufficient. (Do not grease unless greasing is required. Do not use a lubricant except that which is specified. Refer to Item 6. Oiling Standard.)

2) Recording Paper

(1) Use recording paper recommended in Paragraph 2-4 of the specifications.

3. Repairs

The printer has three repair levels (A, B, and C) taking into account the difficulty of after sale services and repairs. Persons in charge of repairs are asked to make repairs after comparing their own technical proficiencies and the required repair level.

1) Repair Levels

Level A: A general knowledge of the principles and construction of the printer and some degree of skill are required. Experience or a high degree of skill is not required.

Level B: A good knowledge of the principles and construction of the printer and the skill to disassemble the printer and to use measuring instruments, jigs, and tools accociated with disassembly and reassembly are required. This level requires experience in making repairs.

Level C: A high degree of special knowledge regarding the principles and construction of the printer are required along with the ability to use measuring instruments, jigs, and tools associated with the printer. In-depth experience and skill in repair work are required.

2) Repair Procedure

When a fault occurs, carefully observe and check the type of failure and the conditions surrounding it. Find out the cause and make repairs after checking the location of the fault, referring to the "Repair Guide."

(1) "Phenomenon": Determine the trouble phenomenon from this column.

(2) "Condition": Compare the trouble with this column and verify whether it coincides.

(3) "Cause": Causes bassed on the condition of the trouble are listed. Verify the cause. Use the repair level described above when making repairs after fully considering the repair level.

(4) "Locations and Methods of Checking": The column lists where to check for trouble and by what method. Check according to the instructions in this column and locate the trouble.

(5) "Repair Method": Repair the trouble according to the instructions described in this column. If the same phenomenon or conditions exist after making repairs, check the other items in the cause column and make necessary repairs.

3) Repair Tools

- Screwdrivers (Precision Screwdrivers)
  Phillips Type 4, equivalent to No. 000.
  Phillips Type 5, equivalent to No. 00.
  Flat-blade Type 5
- ET Holders E-Ring
  ET 2
  ET 1.5
  ET 1.2
- Radio pliers, or reed pliers
- Tweezers
- Soldering iron

Phenomenon	Condition	Cause	Level	Location and Method of Checking	Repair Method
1. Does not draw lines	X-motor (2-1), Y-motor (3-1), and pen drive electromagnet (4-1) operate normally, but no printing is done.	Pens (5-1 to 4) have come off, or the ink is exhausted.	A	Are the pens mounted properly? Do the pens have enough ink?	Mount properly. Replace the pens.
2. Lateral lines cannot be drawn	(1) X-motor (2-1) does not rotate.	(1) X-motor lead wire is cut.	B	Check that a normal current is impressed to each phase of the motor.	Replace X-motor.
		(2) Idle gear (2-2) is deformed.	B	Check if the X idle gear is normal.	Replace the X idle gear.
		(3) Deformation of bobbin gear unit (2-3), misalignment of two-piece teeth.	B	Dismount wire unit (2-4), rotate bobbin gear by hand, and check rotation state.	Replace bobbin gear unit.
		(4) Foreign matter has accumulated between gears.	A	Rotate bobbin and unit by hand and check for foreign matter.	Remove foreign matter.
		(5) Low battery voltage.	A	Check if battery voltage is below 4.5V.	Recharge to regular voltage.
		(6) Slider unit (4-5) does not slide properly on shaft.	B	Dismount wire and move slider unit to the right and left by hand.	• Replace slide unit. • Remove foreign matter if it is obstructing movement.
	(2) Abnormality is noticed regardless of whether the pen is moving up or down.	(1) Foreign matter has accumulated in the moving section of the slider unit.	A	Check that slider unit moves smoothly on the effective printing area and check for an abnormal load by slowly rotating the bobbin gear by hand.	Remove any foreign matter
		(2) Contact between pen take-out lever unit (6-1) and pen.	B	Check contact between pen take-out lever and slider unit.	Replace pen take-out lever.

Phenomenon	Condition	Cause	Level	Location and Method of Checking	Repair Method
		(3) Wire fastening position on bobbin has moved.	B	Rotate bobbin gear unit (2-3) by hand and check that slider unit moves smoothly from left edge to right edge.	Restretch wire if its fastening position is wrong.
		(4) Improper pulley rotation of pulley support base unit(right).	B	Dismount wire from pulley and check for smooth rotation.	Replace pulley support base unit.
		(5) Sleeve (2-5) and frame make contact.	B	Check for deformation between frame unit and sleeve, as well as for other phenomena.	Repalce sleeve.
		(6) X motor unit (2-1) is operating improperly.	B	Dismount X idle gear (2-2), slowly rotate motor gear, and check for abnormal load.	Replace motor.
	(2) X-motor rotates, but slider unit does not move to the right or left.	(1) Wire has come off	A	Check if wire has come off the bobbin gear.	Restretch wire properly.
		(2) Wire is cut.	B	Check that wire has not been cut.	Replace wire unit.
		(3) Bobbin gear and wire slip.	A	Confirm that wire is properly screwed on to bobbin gear.	• Tighten the screws.
		(4) Gear is damaged	A	Check that X idle gear and bobbin gear are operating properly.	• Replace the bobbin gear unit. • Replace damaged gear.
3. Insufficient Lateral Movement	(1) Operates in pen-down mode only, and not normal.	(1) Rubber roller unit (3-3) is scratched.	C	Slowly rotate the rubber roller by hand and check for scratches and foreign matter.	• Replace rubber roller unit if scratches are found. • Remove foreign matter.
		(2) Print paper has irregulations.	A	Check the surface of the print paper.	Use normal print paper.
		(3) Deformation of ejection lever shaft unit (4-2).	B	Check the contact between the ejection lever and ejection roller (4-4).	• Replace ejection lever shaft unit.

Phenomenon	Condition	Cause	Level	Location and Method of Checking	Repair Method
		(4) Low battery voltage	A	Check that battery voltage is not below 4.5V.	Recharge to normal voltage.
		(5) Contact between set-screw of return spring and small roller.	A	Move slider and confirm contact.	• Replace rotary holder. • Replace paper holding roller support plate unit.
4. Drawing is done segment by segment	(1) Actuator of the electro-magnet unit (4-1) is detached from the electromagnet coil.	(1) Current is not being supplied to the electro-magnet properly.	A	Check if current is going to the electromagnet.	Replace electromagnet and repair drive circuit.
		(2) Abnormally large electromagnet energize stroke.	B	Check if gap between rubber roller and pen tip is 0.6mm in the pen-up mode.	• Replace with a pen having the standard length ($23.3^{+0}_{-0.1}$ mm). • Adjust the gap by turning the mounting screw on the electromagnet unit (4-1).
		(3) Low battery voltage	A	Check if battery voltage is below 4.5V.	Recharge to normal voltage.
		(4) Electromagnet unit is faulty.	B	Check operation of the actuator for the electro-magnet unit, spring fatigue, deformation, etc.	Replace electromagnet unit.
		(5) Rotary holder on slider unit has moved.	A	Check that rotary holder pen is directly above the specified position (print position).	Manually maintain electro-magnet actuator in the energized position, rotate rotary holder in a counter-clockwise direction, and fix it in its proper position.
		(6) Ejection lever does not operate smoothly.	C	Check for a bend in the ejection lever and inspect the bearing section.	• Exchange ejection lever ejection lever shaft unit.

Phenomenon	Condition	Cause	Level	Location and Method of Checking	Repair Method
	(2) Electromagnet operates normally	(1) Pen movement is slow.	B	Check the shape of the pen Also check for rotary holder deformation and the presence of foreign matter.	• Pen exchange. • Rotary holder exchange. • Removal of foreign matter.
		(2) Deformation and fatigue of pen return spring (4-5-3).	B	Inspect the pen return spring.	Repalce rotary holder set (4-5-2).
		(3) Paper is not winding on rubber roller properly.	A	Remove paper and check for paper guide deformation,	• Return it to its normal shape using tweezers, etc. if it is only slightly deformed. • Remount properly if small roller which holds the paper has come off.
		(4) Pen is too long.	A	Measure the pen length.	• Mount a proper pen (length 23.3^{+0}_{-1}mm)
5. Color does not Change	(1) Pen moves to color change area without moving up.	(1) Electromagnet induced pen up function is abnormal.	B	Check transmission system from electromagnet to pen drive.	See Phenomenon 4.
	(2) Carriage does not move until it reaches the left edge.	(1) Foreign matter has accumulated in slider section.	A	Check for foreign matter. Check if slider moves smoothly by rotating the bobbin gear by hand.	Remove foreign matter and exchange slider unit.
		(2) Contact between slide shaft support plate (4-5-5) and frame.	B	Check for contact.	Replace slider unit.
	(3) Rotary holder does not rotate at all.	(1) Fatigue and deformation of color change bar. (4-7).	B	Check color change bar.	• Gently lift color change bar using tweezers. • Replace color change click.
		(2) Pen tip has come off the return spring.	B	Check all four pens to see if they have come off.	• Repair using tweezers. • Replace rotary holder if return spring is deformed.

Phenomenon	Condition	Cause	Level	Location and Method of Checking	Repair Method
		(3) Pen return spring is deformed.	B	Check the shape of the pen return spring.	• Replace rotary holder.
		(2) Reed switch is faulty	B	Check if reed switch actuates when magnetic flux is normal.	Replace reed switch unit (4-6).
	(3) Rotary holder rotations are short by one	(1) Discrepancy in mounting of the reed switch unit.	B	Check position of reed switch unit.	Replace reed switch unit.
		(2) Excessive rotation of rotary holder.	A	Check if rotary holder excessively due to foreign matter, etc.	Remove foreign matter, etc.
7. Paper is not fed.	(1) Y motor (3-1) does not rotate.	(1) Y motor lead wire is cut.	B	Check if normal current is impressed to each phase of the motor.	Replace X motor.
		(2) Deformation of Y idle gear (3-2).	B	Check if Y idle gear is normal or not.	Replace Y idle gear.
		(3) Rubber roller unit (3-3) does not rotate well.	B	Dismount Y idle gear and check rubber roller rotations. Caution rotations are heavy due to friction between rubber roller and paper guide when paper is not inserted.	Replace rubber roller unit.
		(4) Foreign matter between gears.	A	Slowly rotate Y idel gear by hand and check for foreign matter.	Remove foreign matter.
		(5) Low battery voltage.	A	Check if battery voltage is below 4.5V.	Recharge to normal voltage.
		(6) Paper holding roller support plate unit (left) (3-4) does not operate smoothly.	B	Hook tweezer tips in hole of spring hook on paper holding roller support plate unit and move it up and down.	Replace paper holding roller support plate unit (left).
		(7) Paper holding roller support plate unit (right) (3-5) does not function well.	B	Hook tweezer tips in hole of spring hook on paper holding roller support plate unit and move it up and down.	Replace paper holding roller support plate unit (right).

Phenomenon	Condition	Cause	Level	Location and Method of Checking	Repair Method
	(2) Paper and rubber roller slip.	(1) Damage to paper holding roller (large) (3-6) and paper holding roller (small) (3-7).	A	Check if paper holding roller is there.	Replace damaged roller.
		(2) Deformation of paper guide.	C	Check for paper guide deformation.	Replace paper guide.
		(3) Foreign matter in paper guide.	A	Check for foreign matter in paper guide and for insertion of paper.	Remove foreign matter.
8. Y-direction movement is insufficient.	(1) Character alignment on one line is bad, and the line rises at the right end.	(1) Roll paper load is too heavy.	A	Check that roll paper is guided smoothly into the printer.	Repair roll paper guide.
	(2) Stepping error in Y-direction.	(1) Y drive mechanism gear is damaged.	B	Check Y idle gear (3-2), rubber roller unit (3-3) gear, and Y motor unit (3-1) gear.	Replace gears.
		(2) Sliding paper feed gear, by one tooth, gearing of rubber roller unit is not enough.	A	Check that the two-piece tooth gear on rubber roller unit is engaging after being slid by one tooth.	Mount after setting it properly.
		(3) Rubber roller unit bearing is worn.	B	Move rubber roller unit gear up and down by hand and check for play.	• Replace rubber roller unit if wear is noticed. • Fix by using a cyano-acrylate adhesive when there is play between the bearing and frame. • Replace printer.
		(4) Low battery voltage.	A	Check if battery voltage is below 4.5V.	Recharge to regular voltage.

Phenomenon	Condition	Cause	Level	Location and Method of Checking	Repair Method
	(3) Origin position differs after making many movemtnts in Y direction. Origin position changes after printing a large number of characters.	(1) Rubber roller and paper slip.	A	Check for stained rubber roller.	Wipe off rubber roller stain.
		(2) Deformation of paper guide.	A	Check paper guide.	• Repair paper guide if there is any deformation. • Replace printer.
		(3) Roll paper is guided improperly.	A	Check roll paper rotation and ensure that the center of the paper and the center of the printer are aligned.	Repair roll paper guide.
		(4) Paper type does not match printer.	A	Check that the specified paper is used.	Use the specified paper.
9. Character misalignment is substantial.	(1) "F" is drawn as shown below.	(1) Improper engagement of bobbin gear unit (2-3) after sliding by one tooth.	A	Check gear engagement.	Mount properly.
		(2) Rotary holder and slider do not lock sufficiently.	B	Check rotary holder play by rotating it slowly by hand.	Exchange slider unit.
		(3) Play between pen return spring and pen tips.	B	Check by rotating X bobbin gear back and forth for several seconds by hand in the pen-down mode.	Replace rotary holder.
		(4) Wire spring fatigue in wire unit (2-4), elongation of wire.	B	Check for slack in wire	Replace wire unit.

Phenomenon	Condition	Cause	Level	Location and Method of Checking	Repair Method
	(2) "F" is printed as shown below. F F OK NG	(1) Pen and return spring.	B	Check by rotating Y idle gear back and forth for several seconds by hand in the pen-down mode.	Replace rotary holder.
		(2) Play in entire slider.	B	Check slider and X drive system.	Exchange slider.
	(3) "P" is short as shown below. P P OK NG	(1) Faulty engagement of paper feed gear inside rubber roller unit after sliding by one tooth.	A	Check gear engagement.	Mount properly.
		(2) Substantial play in rubber roller bearing.	B	Check for play by moving the gear vertically.	Replace rubber roller unit.

6. OILING STANDARD

Two types of oil are used in this printer – G488 and CRC 5-56. When oiling during disassembly and re-assembly, thoroughly clean the parts and oil in accordance with the table below.

No.	Oiling Location	Oil Type	Part code
(1)	Area of contact between paper holding roller support plate (left) and side plate.	G-488	UKŌG-0108CSZZ
(2)	Contact section between paper holding roller support plate (right) and side plate.	G-488	UKŌG-0108CSZZ
(3)	Sliding sections (4 locations) between paper holding roller and roller shaft.	G-488	UKŌG-0108CSZZ
(4)	Sliding section between rubber roller unit shaft and plain washer.	G-488	UKŌG-0108CSZZ
(5)	Contact section between plain washer and side plate.	G-488	UKŌG-0108CSZZ
(6)	Sliding section between ejection lever shaft unit and slide plate.	G-488	UKŌG-0108CSZZ
(7)	Sliding section between ejection roller and slider set.	G-488	UKŌG-0108CSZZ
(8)	Tooth section of X idle gear.	G-488	UKŌG-0108CSZZ
(9)	Tooth section of Y idle gear.	G-488	UKŌG-0108CSZZ
(10)	Sliding section between holder stopper and holding plate.	G-488	UKŌG-0108CSZZ
(11)	Electromagnet unit actuator shaft.	G-488	UKŌG-0108CSZZ
(12)	Slider shaft (A)	CRC5-56	UKŌG-0098CSZZ
(13)	Slider shaft (B)	CRC5-56	UKŌG-0098CSZZ

7. ADHESION STANDARD

The table below shows points on the clamps where adhesion is to be applied to lock the screws as well as adhesion points on the printer bearings. Make sure that more than 1/4 of the screw heads are glued, but that no adhesive is present in the screw head recessions.

No.	Adhesion Point	Adhesive	Part Code
1	X motor unit set-screws in 2 places Phillips type pan head machine screws (SP2.3 x 3) Phillips type pan head machine screws (SP2 x 3)	Screw lock	UKŌG-0003SCZZ
2	Bobbin gear unit wire set-screws (1 place) Phillips type pan head machine screws (SP2 x 3)	Screw lock	UKŌG-0003CSZZ
3	Slider unit wire set-screws (1 place) Phillips type pan head machine screws (SP2 x 3)	Screw lock	UKŌG-0003CSZZ
4	Y motor unit set-screws 2 places Phillips type pan head machine screws (SP2.3 x 3) Phillips type pan head machine screws (SP2 x 3)	Screw lock	UKŌG-0003CSZZ
5	Electromagnet unit set-screws in one place Phillips type pan head machine screws (SP2.5 x 3)	Screw lock	UKŌG-0003CSZZ
6	Reed switch unit set-screws in one place Phillips type pan head machine screws (SP2 x 3)	Screw lock	UKŌG-0003CSZZ
7	Color change bar set-screws Phillips type pan head machine screws (SP1.4 x 1.6)	Screw lock	UKŌG-0003CSZZ
8	Rubber roller unit bearing and side plate	Cyano-acrylate adhesive	UKŌG-0032CSZZ

8. CIRCUIT DIAGRAM & WIRING

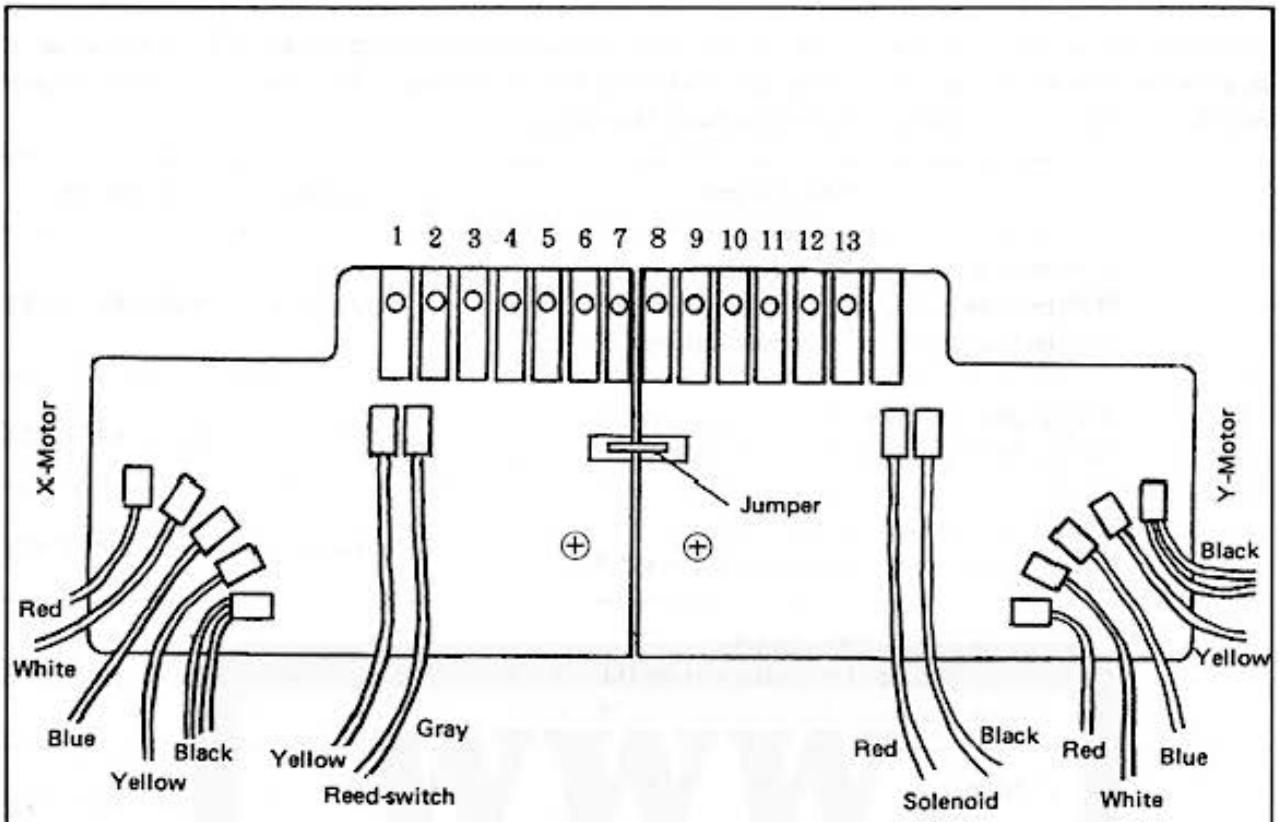

Name		No.	Circuit diagram
Color positon detector	B	1	
	A	2	
X-Motor	D	3	
	C	4	
	B	5	
	A	6	
Motor common		7	
Y-Motor	D	8	
	C	9	
	B	10	
	A	11	
Solenoid (+)	B	12	
Solenoid (−)	A	13	

9. PARTS GUIDE AND PARTS LIST

NO.	PARTS CODE	DESCRIPTION	NEW MARK	PARTS RANK	PRICE RANK
1-1	00PDG053///////	Frame unit	N	C	B B
2-1	00PDG005///////	X motor	N	B	B B
2-2	00P07-0132-01	X idler gear	N	B	A E
2-3	00PDG013///////	Bobbin gear unit	N	B	A K
2-4	00PDG020///////	Wire unit	N	B	A F
2-5	00P26-0001-01	Sleeve for wire	N	C	A C
2-6	00PDG015///////	Pulley unit (Left)	N	C	A P
2-7	00PDG019///////	Pulley unit (Right)	N	C	A N
2-8	00P10-0335-01	Shaft A	N	C	A F
2-9	00P10-0336-01	Shaft B	N	C	A F
3-1	00PDG006///////	Y motor	N	B	B B
3-2	00P07-0131-01	Y idler gear	N	B	A E
3-3	00PDG009///////	Rubber roller unit	N	C	A S
3-4	00PDG010///////	Paper plate (Left)	N	C	A P
3-5	00PDG011///////	Paper plate (Right)	N	C	A P
3-6	00P10-0297-01	Paper pressure roller A	N	C	A D
3-7	00P10-0296-01	Paper pressure roller B	N	C	A D
4-1	00PDG025///////	Magnet unit	N	B	A U
4-2	00PDG030///////	Push lever unit	N	C	A L
4-3	00P12-0147-01	Joint lever	N	C	A F
4-4	00P10-0287-01	Push roller	N	C	A E
4-5	00PDG059///////	Slider head unit	N	B	A X
4-6	00PDG063///////	Read SW. sunit	N	B	A T
4-7	00P19-0219-02	Pawl angle	N	C	A L
6-1	00PDG060///////	Pen eject lever	N	C	A K
6-2	00P19-0214-02	Pen eject spring	N	C	A D
6-3	00P11-0062-02	Pen eject plate	N	C	A G
7-1	00P11-0045-01	Motor cover	N	C	A N
7-2	00P23-0018-01	Rubber bushing cushion	N	C	A C
7-3	00P23-0017-01	Rubber pad cushion	N	C	A C
	00PCB68185///	Washer (3.0)		C	A A
	00P24-0209-01	Washer (2.5)		C	A A
	00P23-0025-01	Washer (1.7)		C	A A